# EANCOM® 2002 S3

# RECADV

# Receiving advice message

# Edition 2016 Upd. 2021


1. Introduction ..... 2
2. Message Structure Chart ..... 6
3. Branching Diagram ..... 8
4. Segments Description ..... 13
5. Segments Layout ..... 17
6. Example(s) ..... 62

## 1. Introduction

**Status**

| | |
|---|---|
| MESSAGE TYPE | : RECADV |
| REFERENCE DIRECTORY | : D.01B |
| EANCOM® SUBSET VERSION | : 009 |

**Definition**

The Receiving Advice message addresses the business needs related to the receipt of goods. It is used either:

- to confirm reception of goods
- in conjunction with the Despatch Advice message to confirm receipt or to advise discrepancies following the reception of goods and/or the controlled contents of a despatch which has been accepted (the waybill is signed).
- to inform about discrepancies between goods received and goods ordered/planned.

**Principles**

The message relates to one consignor and one consignee and is initiated by the party who has received the goods and/or services according to agreed conditions.

The message relates to a single despatch point and a single receiving point. It may cover a number of different items or packages.

It allows the buyer or recipient of goods to provide the supplier or respective agent with;

- a confirmation of the receipt of goods
- a notification on discrepancies between the number of items RECEIVED AND ACCEPTED and the number of items despatched (and/or ordered)
- a notification or instruction concerning the acceptance or suggested actions for the identified discrepancies.
- an instruction for corrections to be undertaken on the invoice or credit notes to be issued which are based on the despatch advice or despatch note. The receiver of goods may also correct internal invoice(s) for goods which are eventually passed on to the final customer.

The Receiving Advice should always be sent by the buyer to the supplier or their respective agents after the goods are physically received and inspected.

The message should be sent within a commercially agreed time period e.g. 24 hours after receipt of goods. This makes it possible for the supplier to check the data of the despatch, adjust the invoice or issue a credit note, control internal procedures, count stock etc.

### Scenarios for the Receiving Advice Message

Any number of business needs and actions affecting the whole production/ordering, delivery and invoicing cycle can arise as a result of the actual delivery of goods.

Discrepancies between goods received and accepted, and goods expected to be delivered might lead to adjustments of delivery schedules, orders, invoices, etc. These actions may be covered by the Receiving Advice, other EDI messages and via other communication channels.

Trading partners should review their business procedures and identify those functions and actions which may be covered by the Receiving Advice message. Scenarios covered by the Receiving Advice message can range from simple to complex, determining the ease and degree of automation.

### Simple Scenario

## 1. Introduction

Within a simple scenario, the Receiving Advice message is only used to confirm or advise discrepancies related to the Despatch Advice or note.

When only confirming or rejecting the reception and acceptance of goods, only the header section of the Receiving Advice message need be transmitted. Confirmation of reception might trigger invoicing for goods and services or may be used by the supplier to control the performance of contracted transportation services.

Within a simple scenario, the Receiving Advice is only used to notify discrepancies between goods received and accepted and goods despatched as communicated in the Despatch Advice. In these cases, the Receiving Advice will usually involve information related to goods lost, stolen or damaged in transit, short or excess shipments, unknown items, etc.

Any adjustments to delivery schedules or purchase orders will have been dealt with beforehand or will be handled through other EDI messages or by other communication channels.

Actions to be taken related to any discrepancies may be agreed beforehand and can be specified in the interchange agreement.

### Complex Scenario

The functionalities covered by the Receiving Advice within a more complex scenario may include those described above as part of the simple scenario and in addition, information or instructions which might alter an existing delivery schedule, outstanding order, invoice, etc.

Within a more complex scenario the Receiving Advice message might notify discrepancies for both despatched and received and accepted quantities AND despatched and ordered or planned quantities, e.g. a Receiving Advice could change the status of a line item on backorder by requesting a new delivery date, cancelling the item, etc.

Within a more complex scenario, suggested actions or instructions relevant to delivery discrepancies may vary depending on stock situation, sales forecasting, etc.

#### Structure of the Receiving Advice Message

The EANCOM® Receiving Advice detail section contains two distinct structures.

### 1. CPS-PAC Segment Group Structure

The first is the CPS-PAC Segment Group structure which can be used to provide information at the shipping container level, (e.g. containers which have been damaged, serialised containers unknown at the reception point, etc.)

This group of segments allows for the provision of shipping container identification numbers. The function or meaning of the identification numbers transmitted in this part of the message should be bilaterally agreed by trading partners and described in the PCI and GIN segments at the CPS-PAC level.

### 2. CPS-LIN Segment Group Structure

The second option is CPS-LIN Segment Group structure which can be used to provide detailed receiving information for a particular item (see Receiving Details per Item below). The item may be contained within any given number of shipping containers which are part of the delivery.

Optionally, more specific receiving information for an item within a particular shipping container can be provided (see Receiving Details per Serial Shipping Container Code below). In these cases each shipping container is uniquely identified by an EAN.UCC Serial Shipping Container Code.

#### Receiving Details per Item

The LIN segment identifies the item and the QTY segment provides the total quantity for the item which has been received and accepted. The quantity in the QTY segment is the global quantity received and accepted and will relate to one or more shipping containers containing the item which are part of the delivery.

Discrepancies between the quantity received and accepted and other quantities (ordered/despatched) and actions to be taken are indicated in the QVR and DTM segments.

## 1. Introduction

No details per specific shipping container are provided in this approach.

**Receiving Details per Serial Shipping Container Code (SSCC)**

Additionally, receiving details per specific shipping container containing the item identified in LIN may be provided. In these cases, LIN will identify the item and the receiving details will be provided per shipping container using the segment group PCI-QTY-QVR-GIN.

The PCI-GIN segments are used to provide the Serial Shipping Container Code of the container containing the item identified in LIN (PCI-GIN). The QTY segment indicates the quantity received and accepted for the specific shipping container. The QVR segment provides information on quantity discrepancies and actions to be taken.

There will be as many PCI-QTY-QVR-GIN repetitions as there are shipping containers containing the item identified in LIN.

**CPS-LIN Structure Examples:**

A delivery consists of a three shipping containers identified by the SSCC's A, B and C. The shipping containers contain three different items: GTIN 1, GTIN 2, GTIN 3 in the following composition:

SSCC A contains 10 GTIN 1

SSCC B contains 10 GTIN 1, 15 GTIN 2 and 20 GTIN 3

SSCC C contains 15 GTIN 2 and 15 GTIN 3.

SHIPMENT DELIVERED:

| SSCC - A | SSCC - B | SSCC - C |
|---|---|---|
| 10 GTIN 1 | 10 GTIN 1<br>15 GTIN 2<br>20 GTIN 3 | 15 GTIN 2<br>15 GTIN 3 |

Receiving Details per Item

The Receiving Advice message may specify receiving details globally per item:

| | | |
|---|---|---|
| LIN 1 | = | GTIN 1 |
| QTY 1 | = | 20 |
| LIN 2 | = | GTIN 2 |
| QTY 2 | = | 30 |
| LIN 3 | = | GTIN 3 |
| QTY 3 | = | 35 |

Receiving Details per Shipping Container

The Receiving Advice message may specify receiving details globally per SSCC:

| | | |
|---|---|---|
| LIN 1 | = | GTIN 1 |
| PCI-GIN | = | SSCC A |
| QTY | = | 10 |
| PCI-GIN | = | SSCC B |
| QTY | = | 10 |

## 1. Introduction

| | | |
|---|---|---|
| LIN 2 | = | GTIN 2 |
| PCI-GIN | = | SSCC B |
| QTY | = | 15 |
| PCI-GIN | = | SSCC C |
| QTY | = | 15 |

| | | |
|---|---|---|
| LIN 3 | = | GTIN 3 |
| PCI-GIN | = | SSCC B |
| QTY | = | 20 |
| PCI-GIN | = | SSCC C |
| QTY | = | 15 |

Note:
For simplicity, the above examples assume that all quantities despatched are received and accepted (no discrepancies). Under such conditions normally no Receiving Advice message would be sent or only the header section of the message would be sent to confirm reception.

## 2. Message Structure Chart

**EANCOM® 2002 S3 Edition 2016 Upd. 2021 Part II**
**RECADV** Receiving advice message

| | | | | | |
|---|---|---|---|---|---|
| UNA | | 1 | C | 1 | - Service string advice |
| UNB | | 2 | M | 1 | - Interchange header |
| **Receiving Advice Heading Section** | | | | | |
| UNH | | 3 | M | 1 | - Message header |
| BGM | | 4 | M | 1 | - Beginning of message |
| DTM | | 5 | M | 10 | - Date/time/period |
| ALI | | 6 | C | 5 | - Additional information |
| FTX | | 7 | C | 99 | - Free text |
| SG1 | | | C | 10 | - RFF-DTM |
| RFF | | 8 | M | 1 | - Reference |
| DTM | | 9 | C | 1 | - Date/time/period |
| SG4 | | | M | 99 | - NAD-SG5-SG6 |
| NAD | | 10 | M | 1 | - Name and address |
| SG5 | | | C | 10 | - RFF |
| RFF | | 11 | M | 1 | - Reference |
| SG6 | | | C | 10 | - CTA-COM |
| CTA | | 12 | M | 1 | - Contact information |
| COM | | 13 | C | 5 | - Communication contact |
| SG10 | | | C | 10 | - TDT |
| TDT | | 14 | M | 1 | - Details of transport |
| SG11 | + | | C | 9999 | - EQD-SG13 |
| EQD | + | 15 | M | 1 | - Equipment details |
| SG13 | + | | C | 25 | - SEL-CDI |
| SEL | + | 16 | M | 1 | - Seal number |
| CDI | + | 17 | M | 10 | - Physical or logical state |
| **Receiving Advice Detail Section** | | | | | |
| SG16 | | | C | 9999 | - CPS-SG17-SG22 |
| CPS | | 18 | M | 1 | - Consignment packing sequence |
| SG17 | | | C | 9999 | - PAC-QVR-SG18 |
| PAC | | 19 | M | 1 | - Package |
| QVR | | 20 | C | 1 | - Quantity variances |
| SG18 | | | C | 999 | - PCI-SG20 |
| PCI | | 21 | M | 1 | - Package identification |
| SG20 | | | C | 999 | - GIN |
| GIN | | 22 | M | 1 | - Goods identity number |
| SG22 | | | C | 9999 | - LIN-PIA-IMD-QTY-QVR-DTM-FTX-SG28-SG29 |
| LIN | | 23 | M | 1 | - Line item |
| PIA | | 24 | C | 10 | - Additional product id |
| IMD | + | 25 | C | 25 | - Item description |
| QTY | | 26 | C | 10 | - Quantity |
| QVR | | 27 | C | 10 | - Quantity variances |
| DTM | | 28 | C | 5 | - Date/time/period |
| FTX | | 29 | C | 99 | - Free text |
| SG28 | | | C | 10 | - RFF-DTM |
| RFF | | 30 | M | 1 | - Reference |
| DTM | | 31 | C | 1 | - Date/time/period |
| SG29 | | | C | 9999 | - PCI-QTY-QVR-SG31 |
| PCI | | 32 | M | 1 | - Package identification |
| QTY | | 33 | C | 1 | - Quantity |
| QVR | | 34 | C | 1 | - Quantity variances |
| SG31 | | | C | 10 | - GIN |
| GIN | | 35 | M | 1 | - Goods identity number |

© Copyright GS1

## 2. Message Structure Chart

**EANCOM® 2002 S3** **Edition 2016 Upd. 2021** **Part II**
**RECADV** Receiving advice message

**Receiving Advice Summary Section**

| | | | | |
|---|---|---|---|---|
| CNT | 36 | C | 1 | - Control total |
| UNT | 37 | M | 1 | - Message trailer |
| UNZ | 38 | M | 1 | - Interchange trailer |

## 3. Branching Diagram

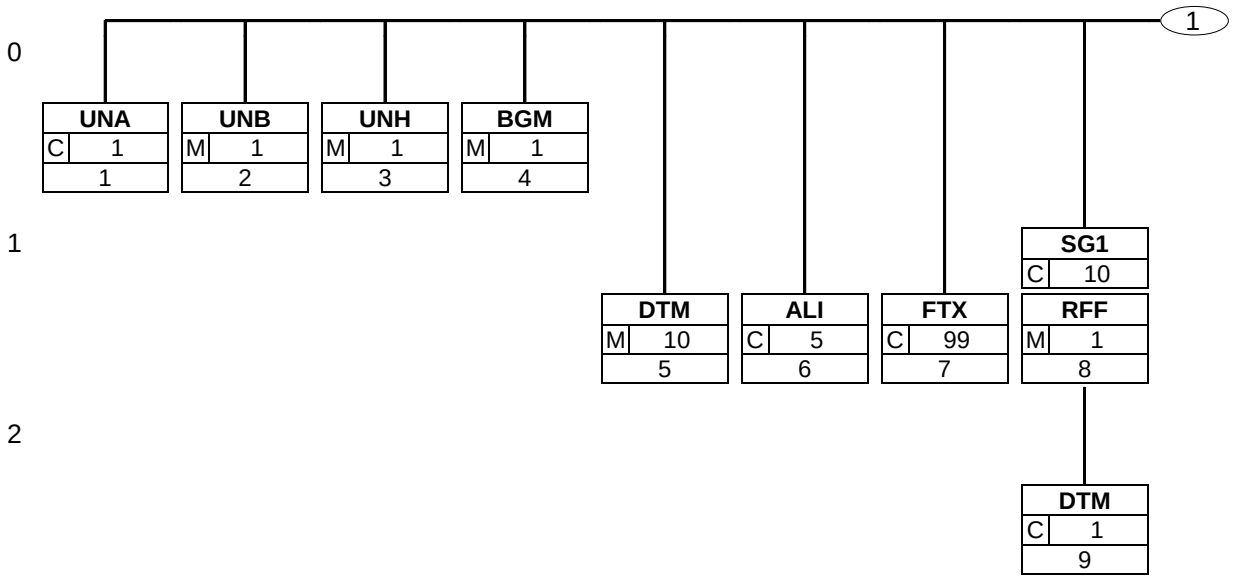

## 3. Branching Diagram

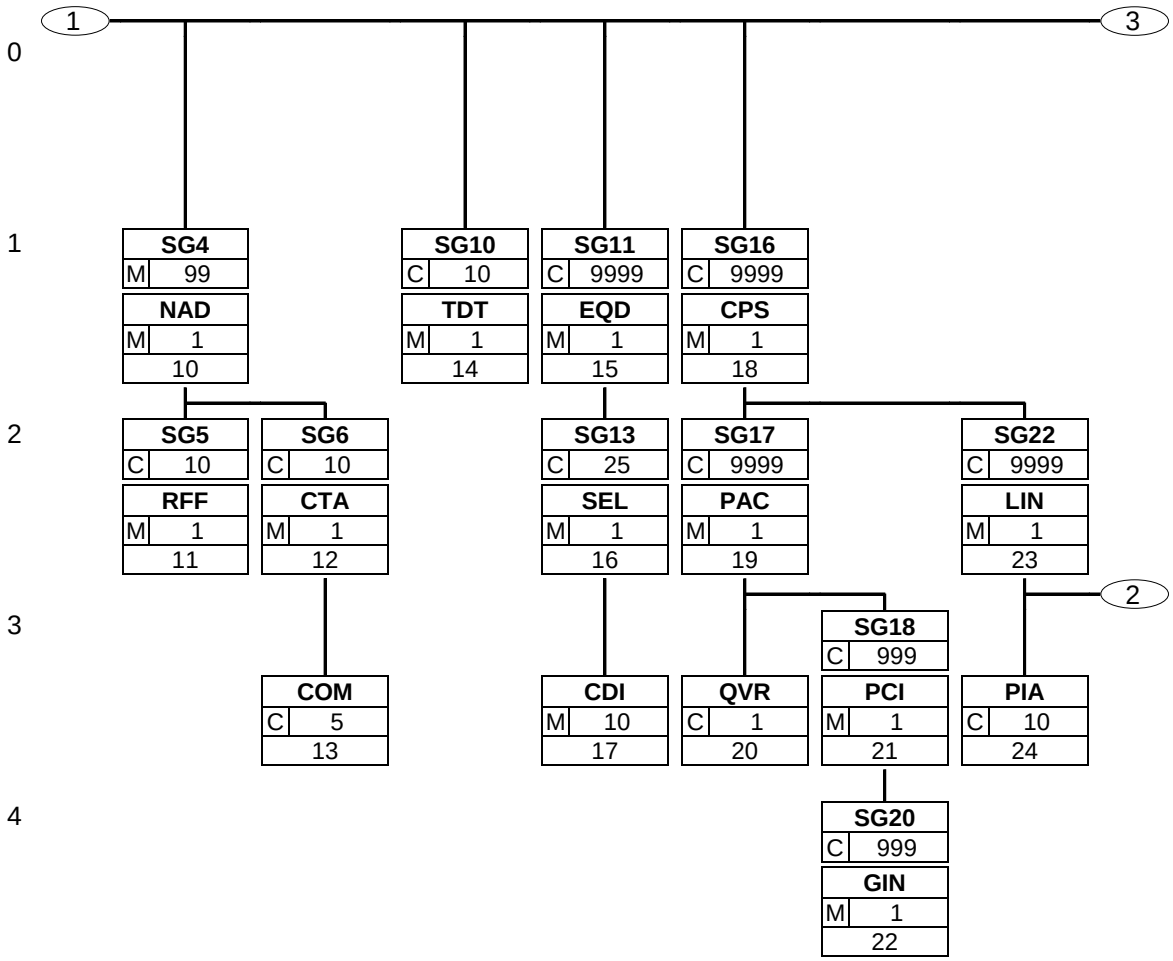

## 3. Branching Diagram

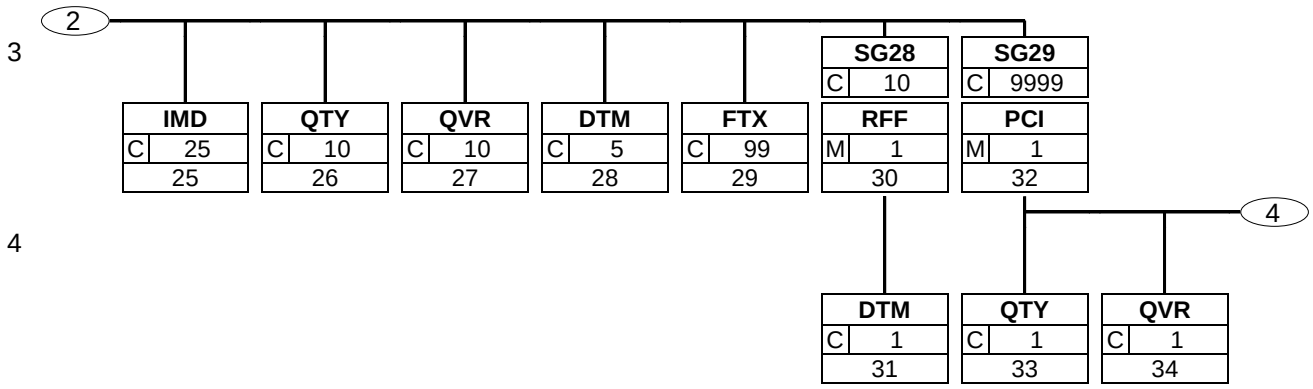

## 3. Branching Diagram

4

4

| | |
|---|---|
| **SG31** | |
| C | 10 |
| **GIN** | |
| M | 1 |
| 35 | |

## 3. Branching Diagram

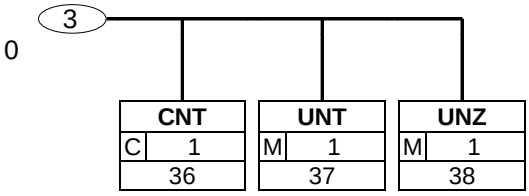

## 4. Segments Description

UNA - C 1 - Service string advice

The service string advice shall begin with the upper case characters UNA immediately followed by six characters in the order shown below. The same character shall not be used in more than one position of the UNA.

UNB - M 1 - Interchange header

This segment is used to envelope the interchange, as well as to identify both, the party to whom the interchange is sent and the party who has sent the interchange. The principle of the UNB segment is the same as a physical envelope which covers one or more letters or documents, and which details, both the address where delivery is to take place and the address from where the envelope has come.

**Receiving Advice Heading Section**

UNH - M 1 - Message header

This message is used to head, identify and specify a message.

BGM - M 1 - Beginning of message

This segment is used to indicate the type and function of a message and to transmit the identifying number.

DTM - M 10 - Date/time/period

This segment is used to specify any dates related to the complete receiving advice message.

ALI - C 5 - Additional information

This segment is used to specify any additional information related to the complete order.

FTX - C 99 - Free text

This segment is used to provide any free text information related to the complete message.

**SG1** - C 10 - **RFF-DTM**

A group of segments giving references where necessary, dates relating to the whole message, e.g. despatch advice, contract number.

RFF - M 1 - Reference

This segment is used to specify references which apply to the whole receiving advice message.

DTM - C 1 - Date/time/period

This segment is used to specify dates relating to the references given in the previous RFF segment.

**SG4** - M 99 - **NAD-SG5-SG6**

A group of segments identifying names, addresses and locations, relevant to the whole Receiving advice.

NAD - M 1 - Name and address

This segment is used to identify the trading partners involved in the Receiving Advice message. Identification of the sender and recipient of the goods is mandatory in the Receiving Advice.

**SG5** - C 10 - **RFF**

A group of segments giving references only relevant to the specified party rather than the whole message.

RFF - M 1 - Reference

This segment is used to specify references related to the party identified in the previous NAD segment.

## 4. Segments Description

| | | |
|---|---|---|
| **SG6** - C 10 | - **CTA-COM** | |
| | | A group of segments giving contact details of the specific person or department within the party identified in the NAD segment. |
| CTA - M 1 | - Contact information | |
| | | This segment is used to identify contact name and/or department within the party specified in the NAD segment. |
| COM - C 5 | - Communication contact | |
| | | This segment identifies the communications number, and type of communications, for the person and/or department identified in the preceding CTA segment. |
| **SG10** - C 10 | - **TDT** | |
| | | A group of segments specifying details of the mode and means of transport. |
| TDT - M 1 | - Details of transport | |
| | | This segment is used to specify the transport details used to deliver the goods detailed in the receiving advice message. |
| **SG11** - C 9999 | - **EQD-SG13** | |
| | | A group of segments identifying equipment with which a problem has occurred or if required by the recipient of the message for further identification. |
| EQD - M 1 | - Equipment details | |
| | | This segment is used to provide information on equipment which has been used in the despatch of the products ordered. |
| **SG13** - C 25 | - **SEL-CDI** | |
| | | A group of segments identifying the seal number and reporting anomalies. |
| SEL - M 1 | - Seal number | |
| | | This segment is used to specify a seal number which is connected to the equipment identified in the EQD segment. |
| CDI - M 10 | - Physical or logical state | |
| | | This segment is used to specify the physical state of the seal number. |

**Receiving Advice Detail Section**

| | | |
|---|---|---|
| **SG16** - C 9999 | - **CPS-SG17-SG22** | |
| | | A group of segments providing details of all packages and/or individual items as received. This segment group provides the capability to give the top-down hierarchical relationship of the package levels. |
| CPS - M 1 | - Consignment packing sequence | |
| | | This segment is used to provide a detailed description of the packaging of the goods. |
| **SG17** - C 9999 | - **PAC-QVR-SG18** | |
| | | A group of segments identifying packaging, quantities and marks and numbers. |
| PAC - M 1 | - Package | |
| | | This segment is used to identify the total number of packages and package types for the hierarchical level identified in the CPS segment. |
| QVR - C 1 | - Quantity variances | |
| | | This segment is used to indicate quantity variances related to the currently identified package. |
| **SG18** - C 999 | - **PCI-SG20** | |
| | | A group of segments specifying markings and labels. |
| PCI - M 1 | - Package identification | |
| | | This segment is used to provide markings and labels information relevant to the packaging unit identified in the PAC segment. |

## 4. Segments Description

| | | | |
|---|---|---|---|
| **SG20** | C | 999 | **GIN** |
| | | | A group of segments giving package identification numbers. |
| GIN | M | 1 | Goods identity number |
| | | | This segment is used to provide identification numbers relevant to the packaging unit identified in the PAC segment. |
| **SG22** | C | 9999 | **LIN-PIA-IMD-QTY-QVR-DTM-FTX-SG28-SG29** |
| | | | A group of segments providing details of the product or service received. |
| LIN | M | 1 | Line item |
| | | | This segment is used to identify the product received. |
| PIA | C | 10 | Additional product id |
| | | | This segment is used to specify additional product codes for the current line item. |
| IMD | C | 25 | Item description |
| | | | This segment is used to provide a description for the current line item. |
| QTY | C | 10 | Quantity |
| | | | This segment is used to specify any quantities related to the current line item. |
| QVR | C | 10 | Quantity variances |
| | | | This segment is used to specify any variances between what was received and accepted and what was ordered/shipped. |
| DTM | C | 5 | Date/time/period |
| | | | This segment is used to specify dates related to the current line item. |
| FTX | C | 99 | Free text |
| **SG28** | C | 10 | **RFF-DTM** |
| | | | A group of segments giving references and dates relevant to the line item. |
| RFF | M | 1 | Reference |
| | | | This segment is used to specify any references associated with the current line item. |
| DTM | C | 1 | Date/time/period |
| | | | This segment is used to specify dates related to the references given in the previous RFF segment. |
| **SG29** | C | 9999 | **PCI-QTY-QVR-SG31** |
| | | | A group of segments identifying one specific package or a number of packages, the marks and numbers, quantities and receiving conditions. |
| PCI | M | 1 | Package identification |
| | | | This segment is used to provide markings and labels information relevant to the product identified in the LIN segment. |
| QTY | C | 1 | Quantity |
| | | | This segment is used to indicate the quantity of the current line item received and accepted which is contained in the package marked with the Serial Shipping Container Code identified in the following GIN segment. |
| QVR | C | 1 | Quantity variances |
| | | | This segment is used to specify quantity variances for the current line item which is contained in the package marked with the Serial Shipping Container Code identified in the following GIN segment. |
| **SG31** | C | 10 | **GIN** |
| | | | A group of segments giving package identification numbers. |
| GIN | M | 1 | Goods identity number |
| | | | This segment is used to provide the Serial Shipping Container Code marked on the packaging of the current line item. |

## 4. Segments Description

**Receiving Advice Summary Section**

CNT - C 1 - Control total

This segment is used to provide message control information for checking on the message receivers in-house system.

UNT - M 1 - Message trailer

This segment is a mandatory UN/EDIFACT segment. It must always be the last segment in the message.

UNZ - M 1 - Interchange trailer

This segment is used to provide the trailer of an interchange.

## 5. Segments Layout

This section describes each segment used in the EANCOM® Receiving advice message. The original EDIFACT segment layout is listed. The appropriate comments relevant to the EANCOM® subset are indicated.

***Notes:***

1. The segments are presented in the sequence in which they appear in the message. The segment or segment group tag is followed by the (M)andatory / (C)onditional indicator, the maximum number of occurrences and the segment description.

2. Reading from left to right, in column one, the data element tags and descriptions are shown, followed by in the second column the EDIFACT status (M or C), the field format, and the picture of the data elements. These first pieces of information constitute the original EDIFACT segment layout.

   Following the EDIFACT information, EANCOM® specific information is provided in the third, fourth, and fifth columns. In the third column a status indicator for the use of (C)onditional EDIFACT data elements (see 2.1 through 2.3 below), in the fourth column the restricted indicator (see point 3 on the following page), and in the fifth column notes and code values used for specific data elements in the message.

2.1 (M)andatory data elements in EDIFACT segments retain their status in EANCOM®.

2.2 Additionally, there are five types of status for data elements with a (C)onditional EDIFACT status, whether for simple, component or composite data elements. These are listed below and can be identified when relevant by the following abbreviations:

| | | |
|---|---|---|
| - REQUIRED | **R** | Indicates that the entity is required and must be sent. |
| - ADVISED | **A** | Indicates that the entity is advised or recommended. |
| - DEPENDENT | **D** | Indicates that the entity must be sent in certain conditions, as defined by the relevant explanatory note. |
| - OPTIONAL | **O** | Indicates that the entity is optional and may be sent at the discretion of the user. |
| - NOT USED | **N** | Indicates that the entity is not used and should be omitted. |

2.3 If a composite is flagged as **N, NOT USED**, all data elements within that composite will have blank status indicators assigned to them.

3. Status indicators detailed in the fourth column which directly relate to the code values detailed in the fifth **column** may have two values:

| | | |
|---|---|---|
| - RESTRICTED | ***** | A data element marked with an asterisk (*) in the fourth column indicates that the listed codes in column five are the only codes available for use with this data element, in this segment, in this message. |
| - OPEN | | All data elements where coded representation of data is possible and a restricted set of code values is not indicated are open (no asterisk in fourth column). The available codes are listed in the EANCOM® Data Elements and Code Sets Directory. Code values may be given as examples or there may be a note on the format or type of code to be used. |

4. Different colours are used for the code values in the segment details: restricted codes are in red and open codes in blue.

## 5. Segments Layout

Segment number: 1

| **UNA** | - C | 1 - Service string advice | | | |
|---|---|---|---|---|---|
| Function: To define the characters selected for use as delimiters and indicators in the rest of the interchange that follows. | | | | | |
| | | EDIFACT | GS1 | * | Description |
| UNA1 | Component data element separator | M an1 | **M** | * | Used as a separator between component data elements contained within a composite data element (default value: ":") |
| UNA2 | Data element separator | M an1 | **M** | * | Used to separate two simple or composite data elements (default value: "+" ) |
| UNA3 | Decimal notation | M an1 | **M** | * | Used to indicate the character used for decimal notation (default value:".") |
| UNA4 | Release indicator | M an1 | **M** | * | Used to restore any service character to its original specification (value: "?"). |
| UNA5 | Reserved for future use | M an1 | **M** | * | (default value: space ) |
| UNA6 | Segment terminator | M an1 | **M** | * | Used to indicate the end of segment data (default value: " ' ") |

Segment Notes:

The service string advice shall begin with the upper case characters UNA immediately followed by six characters in the order shown below. The same character shall not be used in more than one position of the UNA.
This segment is used to inform the receiver of the interchange that a set of service string characters which are different to the default characters are being used.
When using the default set of service characters, the UNA segment need not be sent. If it is sent, it must immediately precede the UNB segment and contain the four service string characters (positions UNA1, UNA2, UNA4 and UNA6) selected by the interchange sender.
Regardless of whether or not all of the service string characters are being changed every data element within this segment must be filled, (i.e., if some default values are being used with user defined ones, both the default and user defined values must be specified).
When expressing the service string characters in the UNA segment, it is not necessary to include any element separators.
The use of the UNA segment is required when using a character set other than level A.
UNA:+.? '

## 5. Segments Layout

Segment number: 2

| **UNB** | - M | 1 - Interchange header | | | |
|---|---|---|---|---|---|
| Function:<br>To start, identify and specify an interchange. | | | | | |
| | | EDIFACT | GS1 | * | Description |
| S001 | SYNTAX IDENTIFIER | M | **M** | | See Part I chapter 5.2.7 and segment notes. |
| 0001 | Syntax identifier | M a4 | **M** | * | UNOA = UN/ECE level A<br>UNOB = UN/ECE level B<br>UNOC = UN/ECE level C<br>UNOD = UN/ECE level D<br>UNOE = UN/ECE level E<br>UNOF = UN/ECE level F |
| 0002 | Syntax version number | M n1 | **M** | * | 3 = Version 3 |
| S002 | INTERCHANGE SENDER | M | **M** | | |
| 0004 | Sender identification | M an..35 | **M** | | GLN (n13) |
| 0007 | Partner identification code qualifier | C an..4 | **R** | * | 14 = GS1 |
| 0008 | Address for reverse routing | C an..14 | **O** | | |
| S003 | INTERCHANGE RECIPIENT | M | **M** | | |
| 0010 | Recipient identification | M an..35 | **M** | | GLN (n13) |
| 0007 | Partner identification code qualifier | C an..4 | **R** | * | 14 = GS1 |
| 0014 | Routing address | C an..14 | **O** | | |
| S004 | DATE/TIME OF PREPARATION | M | **M** | | |
| 0017 | Date of preparation | M n6 | **M** | | YYMMDD |
| 0019 | Time of preparation | M n4 | **M** | | HHMM |
| 0020 | Interchange control reference | M an..14 | **M** | | Unique reference identifying the interchange. Created by the interchange sender. |
| S005 | RECIPIENT'S REFERENCE, PASSWORD | C | **O** | | |
| 0022 | Recipient's reference/ password | M an..14 | **M** | | |
| 0025 | Recipient's reference/ password qualifier | C an2 | **O** | | |
| 0026 | Application reference | C an..14 | **O** | | Message identification if the interchange contains only one type of message. |
| 0029 | Processing priority code | C a1 | **O** | | A = Highest priority |
| 0031 | Acknowledgement request | C n1 | **O** | | 1 = Requested |
| 0032 | Communications agreement ID | C an..35 | **O** | * | EANCOM..... |
| 0035 | Test indicator | C n1 | **O** | | 1 = Interchange is a test |
| Segment Notes:<br>This segment is used to envelope the interchange, as well as to identify both, the party to whom the interchange is sent and the party who has sent the interchange. The principle of the UNB segment is the same as a physical envelope which covers one or more letters or documents, and which details, both the address where delivery is to take place and the address from where the envelope has come. | | | | | |

## 5. Segments Layout

Segment number: 2

S001: The character encoding specified in basic code table of ISO/IEC 646 (7-bit coded character set for information interchange) shall be used for the interchange service string advice (if used) and up to and including the composite data element S001 'Syntax identifier' in the interchange header. The character repertoire used for the characters in an interchange shall be identified from the code value of data element 0001 in S001 'Syntax identifier' in the interchange header. The character repertoire identified does not apply to objects and/or encrypted data.
The default encoding technique for a particular repertoire shall be the encoding technique defined by its associated character set specification.
DE 0001: The recommended (default) character set for use in EANCOM® for international exchanges is character set A (UNOA). Should users wish to use character sets other than A, an agreement on which set to use should be reached on a bilateral basis before communications begin.
DE 0004, 0008, 0010, 0014, 0042 and 0046: Within EANCOM® the use of the Global Location Number (GLN) is recommended for the identification of the interchange sender and recipient.
DE 0008: Identification (e.g. a division) specified by the sender of the interchange, to be included if agreed, by the recipient in response interchanges, to facilitate internal routing.
DE 0042: Sub-level of sender internal identification, when further sub-level identification is required.
DE 0014: The address for routing, provided beforehand by the interchange recipient, is used by the interchange sender to inform the recipient of the internal address, within the latter's systems, to which the interchange should be routed. It is recommended that the GLN be used for this purpose.
DE 0007: Identification (e.g. a division) specified by the recipient of the interchange, to be included if agreed, by the sender in response interchanges, to facilitate internal routing.
DE 0046: Sub-level of recipient internal identification, when further sub-level identification is required.
DE S004: The date and time specified in this composite should be the date and time at which the interchange sender prepared the interchange. This date and time may not necessarily be the same as the date and time of contained messages.
DE 0020: The interchange control reference number is generated by the interchange sender and is used to identify uniquely each interchange. Should the interchange sender wish to re-use interchange control reference numbers, it is recommended that each number be preserved for at least a period of three months before being re-used. In order to guarantee uniqueness, the interchange control reference number should always be linked to the interchange sender's identification (DE 0004).
DE S005: The use of passwords must first be agreed bilaterally by the parties exchanging the interchange.
DE 0026: This data element is used to identify the application, on the interchange recipient's system, to which the interchange is directed. This data element may only be used if the interchange contains only one type of message, (e.g. only invoices). The reference used in this data element is assigned by the interchange sender.
DE 0031: This data element is used to indicate whether an acknowledgement to the interchange is required. The EANCOM® APERAK or CONTRL message should be used to provide acknowledgement of interchange receipt. In addition, the EANCOM® CONTRL message may be used to indicate when an interchange has been rejected due to syntax errors.
DE 0032: This data element is used to identify any underlying agreements which control the exchange of data. Within EANCOM® , the identity of such agreements must start with the letters 'EANCOM', the remaining characters within the data element being filled according to bilateral agreements.

```
UNB+UNOA:3+5412345678908:14+8798765432106:14+020102:1000+12345555+++++EANCOMREF 52'
```

## 5. Segments Layout

Segment number: 3

| **UNH** | - M | 1 - Message header | | | |
|---|---|---|---|---|---|
| Function:<br>To head, identify and specify a message. | | | | | |
| | | EDIFACT | GS1 | * | Description |
| 0062 | Message reference number | M an..14 | **M** | | Senders unique message reference. Sequence number of the messages in the interchange. DE 0062 in the UNT will be identical. Sender generated. |
| S009 | MESSAGE IDENTIFIER | M | **M** | | |
| 0065 | Message type | M an..6 | **M** | * | RECADV = Receiving advice message |
| 0052 | Message version number | M an..3 | **M** | * | D = Draft version/UN/EDIFACT Directory |
| 0054 | Message release number | M an..3 | **M** | * | 01B = Release 2001 - B |
| 0051 | Controlling agency | M an..2 | **M** | * | UN = UN/CEFACT |
| 0057 | Association assigned code | C an..6 | **R** | * | EAN009 = GS1 version control number (GS1 Permanent Code)<br>Indicates that the message is the EANCOM version 009 of the Receiving Advice. |
| 0068 | Common access reference | C an..35 | **N** | | |
| S010 | STATUS OF THE TRANSFER | C | **N** | | |
| 0070 | Sequence of transfers | M n..2 | | | |
| 0073 | First and last transfer | C a1 | | | |

Segment Notes:

This message is used to head, identify and specify a message.
DE's 0065, 0052, 0054 and 0051: Indicate that the message is a UNSM Receiving Advice based on the D.01B directory under the control of the United Nations.

Example:
UNH+ME000001+RECADV:D:01B:UN:EAN009'

## 5. Segments Layout

Segment number: 4

| **BGM** | - M | 1 - Beginning of message | | | |
|---|---|---|---|---|---|
| Function: To indicate the type and function of a message and to transmit the identifying number. | | | | | |
| | | EDIFACT | GS1 | * | Description |
| C002 | DOCUMENT/MESSAGE NAME | C | **R** | | |
| 1001 | Document name code | C an..3 | **R** | * | 632 = Goods receipt |
| 1131 | Code list identification code | C an..17 | **N** | | |
| 3055 | Code list responsible agency code | C an..3 | **N** | | |
| 1000 | Document name | C an..35 | **O** | | |
| C106 | DOCUMENT/MESSAGE IDENTIFICATION | C | **R** | | |
| 1004 | Document identifier | C an..35 | **R** | | Receiving Advice number assigned by the document sender.<br>For global unique identification of documents Global Document Type Identifier (GDTI) is available. |
| 1056 | Version identifier | C an..9 | **N** | | |
| 1060 | Revision identifier | C an..6 | **N** | | |
| 1225 | Message function code | C an..3 | **R** | * | 5 = Replace<br>9 = Original<br>27 = Not accepted<br>29 = Accepted without amendment<br>31 = Copy<br>The message function coded, is a critical data element in this segment. It applies to all data indicated in the message. The following definitions apply for the restricted codes:<br>5 = Replace - This code indicates that the current receiving advice message is a replacement due to an error in a previous message. The previous message should be identified in the RFF segment group 1.<br>9 = Original - An original transmission of a Receiving Advice.<br>27 = Not accepted - Message to inform that the referenced message is not accepted by the recipient. The previous message number is specified in the RFF segment.<br>29 = Accepted without amendment - Referenced message is entirely accepted. The previous message number is specified in the RFF segment.<br>31 = Copy - A copy of a receiving advice for a third party for information purposes. |
| 4343 | Response type code | C an..3 | **N** | | |

Segment Notes:

This segment is used to indicate the type and function of a message and to transmit the identifying number.
All references other than the document message number DE 1004 are to be put into the RFF segment.

Example:
BGM+632+REC5488+9'

## 5. Segments Layout

Segment number: 5

| **DTM** - M 10 - Date/time/period | | | | | |
|---|---|---|---|---|---|
| Function:<br>To specify date, and/or time, or period. | | | | | |
| | | EDIFACT | GS1 | * | Description |
| C507 | DATE/TIME/PERIOD | M | **M** | | |
| 2005 | Date or time or period function code qualifier | M an..3 | **M** | * | 35 = Delivery date/time, actual<br>50 = Goods receipt date/time<br>137 = Document/message date/time<br>178 = Arrival date/time, actual<br>200 = Pick-up/collection date/time of cargo<br>369 = Date and or time of handling, estimated<br>772 = Handling start date and/or time, actual<br>773 = Handling end date and/or time, estimated<br>774 = Handling end date and/or time, actual<br>98E = Discharge date/time, start (GS1 Temporary Code)<br>35 = Delivery date/time - This code is used to indicate a situation when the date/time of delivery was not the same as the date/time on which the goods were formally received.<br>200 = Pick-up date/time of cargo (backhauling) - This code is used to indicate the date/time on which goods detailed in the message were collected by the buyer. |
| 2380 | Date or time or period value | C an..35 | **R** | | |
| 2379 | Date or time or period format code | C an..3 | **R** | | 102 = CCYYMMDD<br>203 = CCYYMMDDHHMM<br>718 = CCYYMMDD-CCYYMMDD |

Segment Notes:

This segment is used to specify any dates related to the complete receiving advice message.
DE 2005: Identification of the 'Document/message date/time' (code value 137) is mandatory in an EANCOM message.

Example:
DTM+137:20021111:102'
DTM+50:200211051640:203'
The goods were received on the 5th of November 2002 at 4:40pm.

## 5. Segments Layout

Segment number: 6

| **ALI** | - C | 5 - Additional information | | | |
|---|---|---|---|---|---|
| Function:<br>To indicate that special conditions due to the origin, customs preference, fiscal or commercial factors are applicable. | | | | | |
| | | EDIFACT | GS1 | * | Description |
| 3239 | Country of origin name code | C an..3 | **C** | | |
| 9213 | Duty regime type code | C an..3 | **N** | | |
| 4183 | Special condition code | C an..3 | **R** | * | 199 = Receipt advice, fully detailed<br>200 = Receipt advice, only exceptions |
| 4183 | Special condition code | C an..3 | **N** | | |
| 4183 | Special condition code | C an..3 | **N** | | |
| 4183 | Special condition code | C an..3 | **N** | | |
| 4183 | Special condition code | C an..3 | **N** | | |

Segment Notes:

This segment is used to specify any additional information related to the complete order.
This segment is used to specify the type of receiving advice.

Example:
ALI+++199'

## 5. Segments Layout

Segment number: 7

| **FTX** | - C | 99 - Free text | | | |
|---|---|---|---|---|---|
| Function:<br>To provide free form or coded text information. | | | | | |
| | | EDIFACT | GS1 | * | Description |
| 4451 | Text subject code qualifier | M an..3 | **M** | | AAI = General information<br>DAR = Damage remarks<br>ZZZ = Mutually defined |
| 4453 | Free text function code | C an..3 | **O** | * | 1 = Text for subsequent use<br>3 = Text for immediate use |
| C107 | TEXT REFERENCE | C | **D** | | References to a standard text.<br>This composite is only used when trading partners have agreed to use mutually defined code values. |
| 4441 | Free text value code | M an..17 | **M** | | 001 = ...standard text... |
| 1131 | Code list identification code | C an..17 | **O** | | |
| 3055 | Code list responsible agency code | C an..3 | **D** | | 91 = Assigned by supplier or supplier's agent<br>92 = Assigned by buyer or buyer's agent |
| C108 | TEXT LITERAL | C | **D** | | This composite is only used if coded text can not be used. |
| 4440 | Free text value | M an..512 | **M** | | |
| 4440 | Free text value | C an..512 | **O** | | |
| 4440 | Free text value | C an..512 | **O** | | |
| 4440 | Free text value | C an..512 | **O** | | |
| 4440 | Free text value | C an..512 | **O** | | |
| 3453 | Language name code | C an..3 | **D** | | ISO 639 two alpha code<br>This data element is only used when non-coded free text has been provided in data element C108. |
| 4447 | Free text format code | C an..3 | **N** | | |

Segment Notes:

This segment is used to provide any free text information related to the complete message.
Use of this segment in free form is not recommended since it may inhibit automatic processing of the message.
Coded references to standard texts is an available functionality which enables automatic processing and reduces transmission and processing overheads. Standard texts should be mutually defined among trading partners and can be used to cover legal and other requirements.

Example:
FTX+AAI+1+001::91'

## 5. Segments Layout

Segment number: 8

| | | | | |
|---|---|---|---|---|
| **SG1** | - C | 10 | - | RFF-DTM |
| **RFF** | - M | 1 | - | Reference |

Function:

To specify a reference.

| | | EDIFACT | GS1 | * | Description |
|---|---|---|---|---|---|
| C506 | REFERENCE | M | **M** | | |
| 1153 | Reference code qualifier | M an..3 | **M** | | AAK = Despatch advice number<br>AAU = Despatch note number<br>ALO = Receiving advice number<br>CR = Customer reference number<br>ON = Order number (buyer)<br>POR = Purchase order response number<br>PP = Purchase order change number<br>VN = Order number (supplier)<br>The code 'ALO' should only be used when the code value '5' was used in DE 1225 of the BGM segment. |
| 1154 | Reference identifier | C an..70 | **R** | | |
| 1156 | Document line identifier | C an..6 | **N** | | |
| 4000 | Reference version identifier | C an..35 | **N** | | |
| 1060 | Revision identifier | C an..6 | **N** | | |

Segment Notes:

This segment is used to specify references which apply to the whole receiving advice message.

Example:
RFF+AAK:533662'

## 5. Segments Layout

Segment number: 9

| | | | |
|---|---|---|---|
| **SG1** | - C | 10 - | RFF-DTM |
| **DTM** | - C | 1 - | Date/time/period |

Function:

To specify date, and/or time, or period.

| | | EDIFACT | GS1 | * | Description |
|---|---|---|---|---|---|
| C507 | DATE/TIME/PERIOD | M | **M** | | |
| 2005 | Date or time or period function code qualifier | M an..3 | **M** | * | 171 = Reference date/time |
| 2380 | Date or time or period value | C an..35 | **R** | | |
| 2379 | Date or time or period format code | C an..3 | **R** | | 102 = CCYYMMDD |

Segment Notes:

This segment is used to specify dates relating to the references given in the previous RFF segment.

Example:
DTM+171:20021025:102'

## 5. Segments Layout

Segment number: 10

| | | | | |
|---|---|---|---|---|
| **SG4** | - M | 99 | - | NAD-SG5-SG6 |
| **NAD** | - M | 1 | - | Name and address |

Function:

To specify the name/address and their related function, either by C082 only and/or unstructured by C058 or structured by C080 thru 3207.

| | | EDIFACT | GS1 | * | Description |
|---|---|---|---|---|---|
| 3035 | Party function code qualifier | M an..3 | **M** | | BY = Buyer<br>DP = Delivery party<br>DEQ = Shipper<br>SU = Supplier<br>UC = Ultimate consignee |
| C082 | PARTY IDENTIFICATION DETAILS | C | **A** | | |
| 3039 | Party identifier | M an..35 | **M** | | For identification of parties it is recommended to use GLN - Format n13. |
| 1131 | Code list identification code | C an..17 | **N** | | |
| 3055 | Code list responsible agency code | C an..3 | **R** | * | 9 = GS1 |
| C058 | NAME AND ADDRESS | C | **O** | | This composite may only be used to fulfill the requirements of directive 2003/58/EC, article 4. |
| 3124 | Name and address description | M an..35 | **M** | | |
| 3124 | Name and address description | C an..35 | **O** | | |
| 3124 | Name and address description | C an..35 | **O** | | |
| 3124 | Name and address description | C an..35 | **O** | | |
| 3124 | Name and address description | C an..35 | **O** | | |
| C080 | PARTY NAME | C | **D** | | |
| 3036 | Party name | M an..35 | **M** | | Party Name in clear text. |
| 3036 | Party name | C an..35 | **O** | | |
| 3036 | Party name | C an..35 | **O** | | |
| 3036 | Party name | C an..35 | **O** | | |
| 3036 | Party name | C an..35 | **O** | | |
| 3045 | Party name format code | C an..3 | **O** | | |
| C059 | STREET | C | **D** | | |
| 3042 | Street and number or post office box identifier | M an..35 | **M** | | Building Name/Number and Street Name and/or P.O. Box |
| 3042 | Street and number or post office box identifier | C an..35 | **O** | | |
| 3042 | Street and number or post office box identifier | C an..35 | **O** | | |
| 3042 | Street and number or post office box identifier | C an..35 | **O** | | |
| 3164 | City name | C an..35 | **D** | | City/Town, clear text. |
| C819 | COUNTRY SUB-ENTITY DETAILS | C | **D** | | |
| 3229 | Country sub-entity name code | C an..9 | **O** | | |

## 5. Segments Layout

Segment number: 10

| | | EDIFACT | GS1 | * | Description |
|---|---|---|---|---|---|
| 1131 | Code list identification code | C an..17 | **O** | | |
| 3055 | Code list responsible agency code | C an..3 | **O** | | |
| 3228 | Country sub-entity name | C an..70 | **O** | | County/State in clear text. |
| 3251 | Postal identification code | C an..17 | **D** | | Postal Code |
| 3207 | Country name code | C an..3 | **D** | | ISO 3166 two alpha code |

Segment Notes:

This segment is used to identify the trading partners involved in the Receiving Advice message. Identification of the sender and recipient of the goods is mandatory in the Receiving Advice.

Example:
NAD+BY+5412345000013::9'
NAD+SU+5412345000020::9'

Dependency Notes:
The following composites and data elements are only used when a coded name and address can not be used.
The affected composites and data elements are as follows:
C080 - C059 - 3164 - C819 - 3251 - 3207

## 5. Segments Layout

Segment number: 11

| | | | | |
|---|---|---|---|---|
| **SG4** | - M | 99 | - | NAD-SG5-SG6 |
| **SG5** | - C | 10 | - | RFF |
| **RFF** | - M | 1 | - | Reference |

Function:

To specify a reference.

| | | EDIFACT | GS1 | * | Description |
|---|---|---|---|---|---|
| C506 | REFERENCE | M | **M** | | |
| 1153 | Reference code qualifier | M an..3 | **M** | * | AMT = Goods and Services Tax identification number<br>FC = Fiscal number<br>GN = Government reference number<br>VA = VAT registration number<br>YC1 = Additional party identification (GS1 Temporary Code) |
| 1154 | Reference identifier | C an..70 | **R** | | |
| 1156 | Document line identifier | C an..6 | **N** | | |
| 4000 | Reference version identifier | C an..35 | **N** | | |
| 1060 | Revision identifier | C an..6 | **N** | | |

Segment Notes:

This segment is used to specify references related to the party identified in the previous NAD segment.

Example:
RFF+VA:AF48776'

## 5. Segments Layout

Segment number: 12

| | | | |
|---|---|---|---|
| **SG4** | - M | 99 - | NAD-SG5-SG6 |
| **SG6** | - C | 10 - | CTA-COM |
| **CTA** | - M | 1 - | Contact information |

Function:

To identify a person or a department to whom communication should be directed.

| | | EDIFACT | GS1 | * | Description |
|---|---|---|---|---|---|
| 3139 | Contact function code | C an..3 | **R** | | GR = Goods receiving contact |
| C056 | DEPARTMENT OR EMPLOYEE DETAILS | C | **O** | | |
| 3413 | Department or employee name code | C an..17 | **O** | | |
| 3412 | Department or employee name | C an..35 | **O** | | |

Segment Notes:

This segment is used to identify contact name and/or department within the party specified in the NAD segment. The Global Location Number GLN - Format n13 - is particularly suitable for this purpose.

Example:
CTA+GR+:C SANCHEZ'

## 5. Segments Layout

Segment number: 13

| | | | |
|---|---|---|---|
| **SG4** | - M | 99 - | NAD-SG5-SG6 |
| **SG6** | - C | 10 - | CTA-COM |
| **COM** | - C | 5 - | Communication contact |

Function:

To identify a communication number of a department or a person to whom communication should be directed.

| | | EDIFACT | GS1 | * | Description |
|---|---|---|---|---|---|
| C076 | COMMUNICATION CONTACT | M | **M** | | |
| 3148 | Communication address identifier | M an..512 | **M** | | |
| 3155 | Communication address code qualifier | M an..3 | **M** | | AO = Uniform Resource Location (URL)<br>EI = EDI<br>EM = Electronic mail<br>TE = Telephone |

Segment Notes:

This segment identifies the communications number, and type of communications, for the person and/or department identified in the preceding CTA segment.

Example:
COM+00445885521:TE'

## 5. Segments Layout

Segment number: 14

| | | | |
|---|---|---|---|
| **SG10** | - C | 10 - | TDT |
| **TDT** | - M | 1 - | Details of transport |

Function:

To specify the transport details such as mode of transport, means of transport, its conveyance reference number and the identification of the means of transport.

| | | EDIFACT | GS1 | * | Description |
|---|---|---|---|---|---|
| 8051 | Transport stage code qualifier | M an..3 | **M** | | 20 = Main-carriage transport |
| 8028 | Means of transport journey identifier | C an..17 | **O** | | Reference number covering the transport. |
| C220 | MODE OF TRANSPORT | C | **A** | | |
| 8067 | Transport mode name code | C an..3 | **R** | | |
| 8066 | Transport mode name | C an..17 | **N** | | |
| C228 | TRANSPORT MEANS | C | **O** | | Data Elements 8179 and 8178 are only used when the type of transport must be specifically identified, that is, when a generic description such as road transport is unsuitable. |
| 8179 | Transport means description code | C an..8 | **D** | | 23 = Rail bulk car<br>31 = Truck |
| 8178 | Transport means description | C an..17 | **D** | | |
| C040 | CARRIER | C | **O** | | |
| 3127 | Carrier identifier | C an..17 | **A** | | Global Location Number GLN - Format n13 |
| 1131 | Code list identification code | C an..17 | **O** | | |
| 3055 | Code list responsible agency code | C an..3 | **D** | | 9 = GS1 |
| 3128 | Carrier name | C an..35 | **O** | | |
| 8101 | Transit direction indicator code | C an..3 | **O** | | BS = Buyer to supplier<br>SB = Supplier to buyer |
| C401 | EXCESS TRANSPORTATION INFORMATION | C | **N** | | |
| 8457 | Excess transportation reason code | M an..3 | | | |
| 8459 | Excess transportation responsibility code | M an..3 | | | |
| 7130 | Customer shipment authorisation identifier | C an..17 | | | |
| C222 | TRANSPORT IDENTIFICATION | C | **O** | | |
| 8213 | Transport means identification name identifier | C an..9 | **O** | | |
| 1131 | Code list identification code | C an..17 | **O** | | |
| 3055 | Code list responsible agency code | C an..3 | **D** | | DE 3055 must be used if DE 8213 is used. |
| 8212 | Transport means identification name | C an..35 | **R** | | Vehicle licence plate/Aircraft number |
| 8453 | Transport means nationality code | C an..3 | **O** | | ISO 3166 two alpha code |
| | Transport means ownership | | **N** | | |

## 5. Segments Layout

Segment number: 14

| | EDIFACT | GS1 | * | Description |
|---|---|---|---|---|
| 8281 indicator code | C an..3 | | | |

Segment Notes:

This segment is used to specify the transport details used to deliver the goods detailed in the receiving advice message.

Example:
TDT+20++30+31'

## 5. Segments Layout

Segment number: 15

| | | | | |
|---|---|---|---|---|
| **SG11** | - C | 9999 | - | EQD-SG13 |
| **EQD** | - M | 1 | - | Equipment details |

Function:

To identify a unit of equipment.

| | | EDIFACT | GS1 | * | Description |
|---|---|---|---|---|---|
| 8053 | Equipment type code qualifier | M an..3 | **M** | | CN = Container<br>TE = Trailer |
| C237 | EQUIPMENT IDENTIFICATION | C | **O** | | |
| 8260 | Equipment identifier | C an..17 | **A** | | |
| 1131 | Code list identification code | C an..17 | **O** | | |
| 3055 | Code list responsible agency code | C an..3 | **D** | | 87 = Assigned by carrier<br>This data element must be used if DE8260 is used. |
| 3207 | Country name code | C an..3 | **O** | | |
| C224 | EQUIPMENT SIZE AND TYPE | C | **O** | | |
| 8155 | Equipment size and type description code | C an..10 | **O** | | |
| 1131 | Code list identification code | C an..17 | **O** | | |
| 3055 | Code list responsible agency code | C an..3 | **D** | | This data element must be used if no UN/EDIFACT code is used in DE 8155. |
| 8154 | Equipment size and type description | C an..35 | **O** | | |
| 8077 | Equipment supplier code | C an..3 | **O** | | |
| 8249 | Equipment status code | C an..3 | **O** | | |
| 8169 | Full or empty indicator code | C an..3 | **O** | | |

Segment Notes:

This segment is used to provide information on equipment which has been used in the despatch of the products ordered.

Example:
EQD+TE+93219::87'

## 5. Segments Layout

Segment number: 16

| | | | | |
|---|---|---|---|---|
| **SG11** | - C | 9999 | - | EQD-SG13 |
| **SG13** | - C | 25 | - | SEL-CDI |
| **SEL** | - M | 1 | - | Seal number |

Function:

To specify the seal number or a range of seal numbers.

| | | EDIFACT | GS1 | * | Description |
|---|---|---|---|---|---|
| 9308 | Seal identifier | C an..35 | **R** | | |
| C215 | SEAL ISSUER | C | **R** | | |
| 9303 | Sealing party name code | C an..3 | **R** | | CA = Carrier<br>CU = Customs |
| 1131 | Code list identification code | C an..17 | **O** | | |
| 3055 | Code list responsible agency code | C an..3 | **D** | | 9 = GS1<br>This data element must be used if no UN/EDIFACT code is used in DE 9303. |
| 9302 | Sealing party name | C an..35 | **O** | | |
| 4517 | Seal condition code | C an..3 | **N** | | |
| C208 | IDENTITY NUMBER RANGE | C | **N** | | |
| 7402 | Object identifier | M an..35 | | | |
| 7402 | Object identifier | C an..35 | | | |

Segment Notes:

This segment is used to specify a seal number which is connected to the equipment identified in the EQD segment.

Example:
SEL+2167+CU'

## 5. Segments Layout

Segment number: 17

| | | | | |
|---|---|---|---|---|
| **SG11** | - C | 9999 | - | EQD-SG13 |
| **SG13** | - C | 25 | - | SEL-CDI |
| **CDI** | - M | 10 | - | Physical or logical state |

Function:

To describe a physical or logical state.

| | | EDIFACT | GS1 | * | Description |
|---|---|---|---|---|---|
| 7001 | Physical or logical state type code qualifier | M an..3 | **M** | * | 1 = Upon receipt |
| C564 | PHYSICAL OR LOGICAL STATE INFORMATION | M | **M** | | |
| 7007 | Physical or logical state description code | C an..3 | **R** | | 4 = Damaged |
| 1131 | Code list identification code | C an..17 | **O** | | |
| 3055 | Code list responsible agency code | C an..3 | **D** | | 9 = GS1<br>This data element must be used if no UN/EDIFACT code is used in DE 7007. |
| 7006 | Physical or logical state description | C an..70 | **O** | | |

Segment Notes:

This segment is used to specify the physical state of the seal number.

Example:
CDI+1+4'

## 5. Segments Layout

Segment number: 18

| | | | | |
|---|---|---|---|---|
| **SG16** | - C | 9999 | - | CPS-SG17-SG22 |
| **CPS** | - M | 1 | - | Consignment packing sequence |

Function:

To identify the sequence in which physical packing is presented in the consignment, and optionally to identify the hierarchical relationship between packing layers.

| | | EDIFACT | GS1 | * | Description |
|---|---|---|---|---|---|
| 7164 | Hierarchical structure level identifier | M an..35 | **M** | | Sequential numbering recommended.<br>When not identifying different shipment hierarchical levels within the Receiving Advice, it is recommended to use a default value of 1. |
| 7166 | Hierarchical structure parent identifier | C an..35 | **A** | | |
| 7075 | Packaging level code | C an..3 | **N** | | |

Segment Notes:

This segment is used to provide a detailed description of the packaging of the goods.

Example:
CPS+1'

## 5. Segments Layout

Segment number: 19

| | | | |
|---|---|---|---|
| **SG16** | - C | 9999 - | CPS-SG17-SG22 |
| **SG17** | - C | 9999 - | PAC-QVR-SG18 |
| **PAC** | - M | 1 - | Package |

Function:

To describe the number and type of packages/physical units.

| | | EDIFACT | GS1 | * | Description |
|---|---|---|---|---|---|
| 7224 | Package quantity | C n..8 | **D** | | In the "advice discrepancies" scenario this data element should be used when quantity variances at the package level have to be reported and carry the number of packages that were actually received. In the "confirmation of receipt of goods" scenario, this data element may carry the number of packages that were received. |
| C531 | PACKAGING DETAILS | C | **C** | | |
| 7075 | Packaging level code | C an..3 | **N** | | |
| 7233 | Packaging related description code | C an..3 | **O** | | 50 = Package barcoded EAN-13 or EAN-8<br>51 = Package barcoded ITF-14<br>52 = Package barcoded UCC or EAN-128 |
| 7073 | Packaging terms and conditions code | C an..3 | **O** | | 1 = Packaging cost paid by supplier<br>2 = Packaging cost paid by recipient<br>3 = Packaging cost not charged (returnable) |
| C202 | PACKAGE TYPE | C | **O** | | |
| 7065 | Package type description code | C an..17 | **A** | | 09 = Returnable pallet (GS1 Temporary Code)<br>201 = Pallet ISO 1 - 1/1 EURO Pallet (GS1 Temporary Code) |
| 1131 | Code list identification code | C an..17 | **O** | | |
| 3055 | Code list responsible agency code | C an..3 | **D** | | 9 = GS1 |
| 7064 | Type of packages | C an..35 | **O** | | |
| C402 | PACKAGE TYPE IDENTIFICATION | C | **N** | | |
| 7077 | Description format code | M an..3 | | | |
| 7064 | Type of packages | M an..35 | | | |
| 7143 | Item type identification code | C an..3 | | | |
| 7064 | Type of packages | C an..35 | | | |
| 7143 | Item type identification code | C an..3 | | | |
| C532 | RETURNABLE PACKAGE DETAILS | C | **D** | | Composite C532 is only used where the packaging being described is returnable. This composite identifies who is responsible for payment of its return. |
| 8395 | Returnable package freight payment responsibility code | C an..3 | **O** | | 1 = Paid by customer<br>2 = Free<br>3 = Paid by supplier |
| 8393 | Returnable package load contents code | C an..3 | **N** | | |

Segment Notes:

This segment is used to identify the total number of packages and package types for the hierarchical level

## 5. Segments Layout

Segment number: 19

identified in the CPS segment.
Please refer to the 'Structure of the Receiving Advice Message' section in the introduction for details on the use of the PAC segment.

Example:
PAC+10++201::9'

## 5. Segments Layout

Segment number: 20

| | | | |
|---|---|---|---|
| **SG16** | - C | 9999 - | CPS-SG17-SG22 |
| **SG17** | - C | 9999 - | PAC-QVR-SG18 |
| **QVR** | - C | 1 - | Quantity variances |

Function:

To specify item details relating to quantity variances.

| | | EDIFACT | GS1 | * | Description |
|---|---|---|---|---|---|
| C279 | QUANTITY DIFFERENCE INFORMATION | C | **R** | | |
| 6064 | Quantity variance value | M n..15 | **M** | | Specify the actual variance amount here. |
| 6063 | Quantity type code qualifier | C an..3 | **R** | | 124 = Damaged goods |
| 4221 | Discrepancy nature identification code | C an..3 | **O** | | |
| C960 | REASON FOR CHANGE | C | **O** | | |
| 4295 | Change reason description code | C an..3 | **O** | | BH = Batch number difference<br>BI = Expiry date difference<br>BJ = Item identification code unknown<br>BN = Temperature outside agreed range<br>PC = Pack difference |
| 1131 | Code list identification code | C an..17 | **O** | | |
| 3055 | Code list responsible agency code | C an..3 | **D** | | 9 = GS1 |
| 4294 | Change reason description | C an..35 | **O** | | |

Segment Notes:

This segment is used to indicate quantity variances related to the currently identified package.
For negative values (e.g. damaged goods not accepted) the variance must be expressed as negative.

Example:
QVR+-40:124++BN::9'

## 5. Segments Layout

Segment number: 21

| | | | |
|---|---|---|---|
| **SG16** | - C | 9999 - | CPS-SG17-SG22 |
| **SG17** | - C | 9999 - | PAC-QVR-SG18 |
| **SG18** | - C | 999 - | PCI-SG20 |
| **PCI** | - M | 1 - | Package identification |

Function:

To specify markings and labels on individual packages or physical units.

| | | EDIFACT | GS1 | * | Description |
|---|---|---|---|---|---|
| 4233 | Marking instructions code | C an..3 | **R** | | 17 = Supplier's instructions<br>39 = Marked with Serial Shipping Container Code (SSCC) |
| C210 | MARKS & LABELS | C | **O** | | |
| 7102 | Shipping marks description | M an..35 | **M** | | |
| 7102 | Shipping marks description | C an..35 | **O** | | |
| 7102 | Shipping marks description | C an..35 | **O** | | |
| 7102 | Shipping marks description | C an..35 | **O** | | |
| 7102 | Shipping marks description | C an..35 | **O** | | |
| 7102 | Shipping marks description | C an..35 | **O** | | |
| 7102 | Shipping marks description | C an..35 | **O** | | |
| 7102 | Shipping marks description | C an..35 | **O** | | |
| 7102 | Shipping marks description | C an..35 | **O** | | |
| 7102 | Shipping marks description | C an..35 | **O** | | |
| 8275 | Container or package contents indicator code | C an..3 | **N** | | |
| C827 | TYPE OF MARKING | C | **N** | | |
| 7511 | Marking type code | M an..3 | | | |
| 1131 | Code list identification code | C an..17 | | | |
| 3055 | Code list responsible agency code | C an..3 | | | |

Segment Notes:

This segment is used to provide markings and labels information relevant to the packaging unit identified in the PAC segment.
The segment may be used to provide labelling information on shipping containers not known by the receiver of the goods.

Example:
PCI+17+CONTAINER ABN54421'

## 5. Segments Layout

Segment number: 22

| | | | | |
|---|---|---|---|---|
| **SG16** | - C | 9999 | - | CPS-SG17-SG22 |
| **SG17** | - C | 9999 | - | PAC-QVR-SG18 |
| **SG18** | - C | 999 | - | PCI-SG20 |
| **SG20** | - C | 999 | - | GIN |
| **GIN** | - M | 1 | - | Goods identity number |

Function:

To give specific identification numbers, either as single numbers or ranges.

| | | EDIFACT | GS1 | * | Description |
|---|---|---|---|---|---|
| 7405 | Object identification code qualifier | M an..3 | **M** | | AW = Serial shipping container code<br>BJ = Serial shipping container code |
| C208 | IDENTITY NUMBER RANGE | M | **M** | | |
| 7402 | Object identifier | M an..35 | **M** | | |
| 7402 | Object identifier | C an..35 | **O** | | |
| C208 | IDENTITY NUMBER RANGE | C | **O** | | |
| 7402 | Object identifier | M an..35 | **M** | | |
| 7402 | Object identifier | C an..35 | **O** | | |
| C208 | IDENTITY NUMBER RANGE | C | **O** | | |
| 7402 | Object identifier | M an..35 | **M** | | |
| 7402 | Object identifier | C an..35 | **O** | | |
| C208 | IDENTITY NUMBER RANGE | C | **O** | | |
| 7402 | Object identifier | M an..35 | **M** | | |
| 7402 | Object identifier | C an..35 | **O** | | |
| C208 | IDENTITY NUMBER RANGE | C | **O** | | |
| 7402 | Object identifier | M an..35 | **M** | | |
| 7402 | Object identifier | C an..35 | **O** | | |

Segment Notes:

This segment is used to provide identification numbers relevant to the packaging unit identified in the PAC segment.
DE C208: If a sequential series of identity numbers is provided (e.g., 1 up to and including 10) only one repetition of the C208 composite is needed with the first repetition of 7402 specifying the numerically smaller identity number (e.g., 1) and the second repetition the larger identity number (e.g., 10). If identity numbers are not sequential and part of a series (e.g., 1, 3, and 10) then a separate C208 and DE 7402 must be used for each identity number.
In EANCOM it is recommended to use the Serial Shipping Container Code (SSCC) for unique identification of individual transport packages.

Example:
GIN+AW+354123450000000014'

## 5. Segments Layout

Segment number: 23

| | | | |
|---|---|---|---|
| **SG16** | - C | 9999 - | CPS-SG17-SG22 |
| **SG22** | - C | 9999 - | LIN-PIA-IMD-QTY-QVR-DTM-FTX-SG28-SG29 |
| **LIN** | - M | 1 - | Line item |

Function:

To identify a line item and configuration.

| | | EDIFACT | GS1 | * | Description |
|---|---|---|---|---|---|
| 1082 | Line item identifier | C an..6 | **R** | | Application generated number of the line item within the Receiving Advice. |
| 1229 | Action request/notification description code | C an..3 | **N** | | |
| C212 | ITEM NUMBER IDENTIFICATION | C | **D** | | This composite will only be used for the identification of GS1 codes. If another coding structure is required, e.g. HIBC, this composite will not be used and the code will be detailed in the PIA segment. |
| 7140 | Item identifier | C an..35 | **R** | | Format n..14<br>GTIN - this is the number of the article which has been received. |
| 7143 | Item type identification code | C an..3 | **R** | * | SRV = GS1 Global Trade Item Number |
| 1131 | Code list identification code | C an..17 | **N** | | |
| 3055 | Code list responsible agency code | C an..3 | **N** | | |
| C829 | SUB-LINE INFORMATION | C | **D** | | |
| 5495 | Sub-line indicator code | C an..3 | **R** | * | 1 = Sub-line information |
| 1082 | Line item identifier | C an..6 | **R** | | |
| 1222 | Configuration level number | C n..2 | **N** | | |
| 7083 | Configuration operation code | C an..3 | **N** | | |

Segment Notes:

This segment is used to identify the product received.
If Global Trade Item Numbers are available it is mandatory to use GTIN within the LIN segment.
If a product has been delivered but not accepted it must be identified using a separate line item. In these cases the received and accepted quantities are zero. Such products might include unknown or not ordered products, excess deliveries, damaged goods, unacceptable product variants or batch numbers, different pack size, etc..
Reasons for the action is detailed in the QTY-QVR-DTM segments.

Example:
LIN+1++5412345123453:SRV'

Dependency Notes:
C829 is only used when sub-lines are required.
FOR A COMPLETE DESCRIPTION ON THE USAGE OF SUB-LINES PLEASE REFER TO PART I, SECTION 4.10.

## 5. Segments Layout

Segment number: 24

| | | | | |
|---|---|---|---|---|
| **SG16** | - C | 9999 | - | CPS-SG17-SG22 |
| **SG22** | - C | 9999 | - | LIN-PIA-IMD-QTY-QVR-DTM-FTX-SG28-SG29 |
| **PIA** | - C | 10 | - | Additional product id |

Function:

To specify additional or substitutional item identification codes.

| | | EDIFACT | GS1 | * | Description |
|---|---|---|---|---|---|
| 4347 | Product identifier code qualifier | M an..3 | **M** | * | 1 = Additional identification<br>5 = Product identification<br>Product Id function, coded has the following restricted coded functions:<br>1 = Additional Identification - To provide an additional identity for the primary GTIN identified in the LIN segment. The additional code can consist of:<br>A supplemental identification which provides more information complementary to the GTIN provided in the LIN segment, e.g., a batch number, promotional variant number, etc,.<br>An alternative identification which may be used instead of the main GTIN provided in the LIN segment, e.g., a buyers article number, an HIBC code, etc.<br>5 - Product Identification - To provide the primary product identification code when no GTIN has been provided in the LIN segment. |
| C212 | ITEM NUMBER IDENTIFICATION | M | **M** | | |
| 7140 | Item identifier | C an..35 | **R** | | |
| 7143 | Item type identification code | C an..3 | **R** | | AC = HIBC (Health Industry Bar Code)<br>IB = ISBN (International Standard Book Number)<br>IN = Buyer's item number<br>PV = Promotional variant number<br>SA = Supplier's article number<br>SRV = GS1 Global Trade Item Number |
| 1131 | Code list identification code | C an..17 | **O** | | |
| 3055 | Code list responsible agency code | C an..3 | **D** | | 9 = GS1<br>91 = Assigned by supplier or supplier's agent<br>92 = Assigned by buyer or buyer's agent |
| C212 | ITEM NUMBER IDENTIFICATION | C | **O** | | |
| 7140 | Item identifier | C an..35 | **R** | | |
| 7143 | Item type identification code | C an..3 | **R** | | |
| 1131 | Code list identification code | C an..17 | **O** | | |
| 3055 | Code list responsible agency code | C an..3 | **D** | | |
| C212 | ITEM NUMBER IDENTIFICATION | C | **O** | | |
| 7140 | Item identifier | C an..35 | **R** | | |
| 7143 | Item type identification code | C an..3 | **R** | | |
| 1131 | Code list identification code | C an..17 | **O** | | |

## 5. Segments Layout

Segment number: 24

| | | EDIFACT | GS1 | * | Description |
|---|---|---|---|---|---|
| 3055 | Code list responsible agency code | C an..3 | **D** | | |
| C212 | ITEM NUMBER IDENTIFICATION | C | **O** | | |
| 7140 | Item identifier | C an..35 | **R** | | |
| 7143 | Item type identification code | C an..3 | **R** | | |
| 1131 | Code list identification code | C an..17 | **O** | | |
| 3055 | Code list responsible agency code | C an..3 | **D** | | |
| C212 | ITEM NUMBER IDENTIFICATION | C | **O** | | |
| 7140 | Item identifier | C an..35 | **R** | | |
| 7143 | Item type identification code | C an..3 | **R** | | |
| 1131 | Code list identification code | C an..17 | **O** | | |
| 3055 | Code list responsible agency code | C an..3 | **D** | | |

Segment Notes:

This segment is used to specify additional product codes for the current line item.

Examples:
PIA+1+AB5124:IN'
In this example the PIA segment is used to provide an additional identification to the GTIN provided in the LIN segment. The GTIN 5412345123453 provided in the LIN segment refers to the internal buyer's item number AB5124.

PIA+5+2209953C001L:AC'
This example details the HIBC code 2209953C001L which is provided as the primary product code because no GTIN was provided in the LIN segment.

## 5. Segments Layout

Segment number: 25

| | | | |
|---|---|---|---|
| **SG16** | - C | 9999 - | CPS-SG17-SG22 |
| **SG22** | - C | 9999 - | LIN-PIA-IMD-QTY-QVR-DTM-FTX-SG28-SG29 |
| **IMD** | - C | 25 - | Item description |

Function:

To describe an item in either an industry or free format.

| | | EDIFACT | GS1 | * | Description |
|---|---|---|---|---|---|
| 7077 | Description format code | C an..3 | **O** | * | A = Free-form long description<br>B = Code and text<br>C = Code (from industry code list)<br>E = Free-form short description<br>F = Free-form<br>S = Structured (from industry code list) |
| C272 | ITEM CHARACTERISTIC | C | **O** | | |
| 7081 | Item characteristic code | C an..3 | **R** | | |
| 1131 | Code list identification code | C an..17 | **O** | | |
| 3055 | Code list responsible agency code | C an..3 | **D** | * | 9 = GS1<br>Must be used if DE7081 contains an GS1 code. |
| C273 | ITEM DESCRIPTION | C | **A** | | |
| 7009 | Item description code | C an..17 | **O** | | CU = Consumer unit (GS1 Permanent Code)<br>DU = Despatch unit (GS1 Permanent Code)<br>RC = Returnable container (GS1 Permanent Code)<br>TU = Traded unit (GS1 Permanent Code)<br>VQ = Variable quantity product (GS1 Permanent Code)<br>SER = Service (GS1 Permanent Code) |
| 1131 | Code list identification code | C an..17 | **O** | | |
| 3055 | Code list responsible agency code | C an..3 | **D** | | 9 = GS1<br>91 = Assigned by supplier or supplier's agent<br>92 = Assigned by buyer or buyer's agent |
| 7008 | Item description | C an..256 | **O** | | |
| 7008 | Item description | C an..256 | **O** | | |
| 3453 | Language name code | C an..3 | **O** | | |
| 7383 | Surface or layer code | C an..3 | **N** | | |

Segment Notes:

This segment is used to provide a description for the current line item.
It is recommended that this segment only be used for coded descriptions. Data element 7008 in clear text should only be used when no product code is available or when free-form descriptions are required by trading partners to communicate basic product descriptions.
GS1 recommends that free text product description be provided in the EANCOM price/sales catalogue (PRICAT) and there after referred to using a GTIN.
If you wish to indicate that promotional details are marked on the package, then this should be indicated in DE 7233 in the PAC segment.
IMD+C++TU::9'
IMD+F++:::CORN CRUNCHIES:CASE'

## 5. Segments Layout

Segment number: 26

| | | | | |
|---|---|---|---|---|
| **SG16** | - C | 9999 | - | CPS-SG17-SG22 |
| **SG22** | - C | 9999 | - | LIN-PIA-IMD-QTY-QVR-DTM-FTX-SG28-SG29 |
| **QTY** | - C | 10 | - | Quantity |

Function:

To specify a pertinent quantity.

| | | EDIFACT | GS1 | * | Description |
|---|---|---|---|---|---|
| C186 | QUANTITY DETAILS | M | **M** | | |
| 6063 | Quantity type code qualifier | M an..3 | **M** | * | 12 = Despatch quantity<br>21 = Ordered quantity<br>46 = Delivered quantity<br>48 = Received quantity<br>59 = Number of consumer units in the traded unit<br>66 = Committed quantity<br>192 = Free goods quantity<br>194 = Received and accepted |
| 6060 | Quantity | M an..35 | **M** | | |
| 6411 | Measurement unit code | C an..3 | **D** | | This DE is only used if the current product is of variable quantity. |

Segment Notes:

This segment is used to specify any quantities related to the current line item.

Example:
QTY+194:150'

## 5. Segments Layout

Segment number: 27

| | | | | |
|---|---|---|---|---|
| **SG16** | - C | 9999 | - | CPS-SG17-SG22 |
| **SG22** | - C | 9999 | - | LIN-PIA-IMD-QTY-QVR-DTM-FTX-SG28-SG29 |
| **QVR** | - C | 10 | - | Quantity variances |

Function:

To specify item details relating to quantity variances.

| | | EDIFACT | GS1 | * | Description |
|---|---|---|---|---|---|
| C279 | QUANTITY DIFFERENCE INFORMATION | C | **R** | | |
| 6064 | Quantity variance value | M n..15 | **M** | | Specify the actual variance amount here. |
| 6063 | Quantity type code qualifier | C an..3 | **R** | | 12 = Despatch quantity<br>21 = Ordered quantity<br>46 = Delivered quantity<br>195 = Received, not accepted, to be returned<br>196 = Received, not accepted, to be destroyed |
| 4221 | Discrepancy nature identification code | C an..3 | **O** | | AC = Over-shipped<br>AE = Delivered but not advised<br>AF = Goods delivered damaged<br>AG = Delivered too late<br>BP = Shipment partial - back order to follow<br>CP = Shipment partial - considered complete, no backorder |
| C960 | REASON FOR CHANGE | C | **O** | | |
| 4295 | Change reason description code | C an..3 | **R** | | AT = Item not ordered<br>BB = Transport means technical failure<br>BC = Equipment technical failure<br>BE = Goods technical failure<br>BH = Batch number difference<br>BI = Expiry date difference<br>BJ = Item identification code unknown<br>BN = Temperature outside agreed range<br>BO = Delivered but not advised<br>BP = Short shipped<br>IS = Item represents substitution from original order (GS1 Temporary Code)<br>PC = Pack difference<br>PE = Minimum/maximum product durability date unacceptable (GS1 Temporary Code)<br>X36 = Best before date out of chronological order (GS1 Temporary Code) |
| 1131 | Code list identification code | C an..17 | **O** | | |
| 3055 | Code list responsible agency code | C an..3 | **D** | | |
| 4294 | Change reason description | C an..35 | **O** | | |

Segment Notes:

This segment is used to specify any variances between what was received and accepted and what was ordered/ shipped.
If the quantity received and/or accepted is less than the quantity expected by the receiver (e.g. damaged goods not accepted), the value of QVR, DE 6064 must be expressed as a negative.
If the quantity received and/or accepted is greater than the quantity expected by the receiver (e.g. overshipped), the value of QVR, DE 6064 must be expressed as a positive.

## 5. Segments Layout

Segment number: 27

Example:
QVR+40:195+AC'
40 units of the current line item were received but not accepted because they were over shipped. These extra units will be returned to the supplier.

## 5. Segments Layout

Segment number: 28

| | | | | |
|---|---|---|---|---|
| **SG16** | - C | 9999 | - | CPS-SG17-SG22 |
| **SG22** | - C | 9999 | - | LIN-PIA-IMD-QTY-QVR-DTM-FTX-SG28-SG29 |
| **DTM** | - C | 5 | - | Date/time/period |

Function:

To specify date, and/or time, or period.

| | | EDIFACT | GS1 | * | Description |
|---|---|---|---|---|---|
| C507 | DATE/TIME/PERIOD | M | **M** | | |
| 2005 | Date or time or period function code qualifier | M an..3 | **M** | | 61 = Cancel if not delivered by this date<br>200 = Pick-up/collection date/time of cargo<br>360 = Sell by date<br>'200, Pick-up/collection date of cargo' - may be used to specify the collection date of goods being returned, and may be used in conjunction with QVR segment DE 6063 qualifier '195, Received not accepted, to be returned'.<br>'61, Cancel if not delivered by this date' - may be used in back-order situations and may be used in conjunction with QVR segment DE 4221 code BP = Shipment partial, back order to follow.<br>'360, Sell by date' - may be used to specify the sell by date of rejected products and may be used in conjunction with QVR segment DE 4295 code PE = minimum/maximum durability date unacceptable. |
| 2380 | Date or time or period value | C an..35 | **R** | | |
| 2379 | Date or time or period format code | C an..3 | **R** | | 102 = CCYYMMDD<br>203 = CCYYMMDDHHMM<br>718 = CCYYMMDD-CCYYMMDD |

Segment Notes:

This segment is used to specify dates related to the current line item.

Example:
DTM+200:20021115:102'

## 5. Segments Layout

Segment number: 29

| | | | | |
|---|---|---|---|---|
| **SG16** | - C | 9999 | - | CPS-SG17-SG22 |
| **SG22** | - C | 9999 | - | LIN-PIA-IMD-QTY-QVR-DTM-FTX-SG28-SG29 |
| **FTX** | - C | 99 | - | Free text |

Function:

To provide free form or coded text information.

| | | EDIFACT | GS1 | * | Description |
|---|---|---|---|---|---|
| 4451 | Text subject code qualifier | M an..3 | **M** | | BAP = External link |
| 4453 | Free text function code | C an..3 | **N** | | |
| C107 | TEXT REFERENCE | C | **N** | | |
| 4441 | Free text value code | M an..17 | | | |
| 1131 | Code list identification code | C an..17 | | | |
| 3055 | Code list responsible agency code | C an..3 | | | |
| C108 | TEXT LITERAL | C | **C** | | |
| 4440 | Free text value | M an..512 | **M** | | External image reference: enter a URL linking to an image of damaged goodsto clarify a reason code. Make sure the receipient of this message is able to link the picture to an appropriate order and line item by the name of the image file. Include the file type extension in the name. Add optional information to indicate the SSCC. The image must be freely accessible for the receiver. |
| 4440 | Free text value | C an..512 | **O** | | Internal Line Item Reference: optionally enter the LIN item identifier that the URL belongs to. |
| 4440 | Free text value | C an..512 | **O** | | Internal SSCC Reference: optionally enter the SSCC the URL belongs to. |
| 4440 | Free text value | C an..512 | **N** | | |
| 4440 | Free text value | C an..512 | **N** | | |
| 3453 | Language name code | C an..3 | **N** | | |
| 4447 | Free text format code | C an..3 | **N** | | |

Segment Notes:

## 5. Segments Layout

Segment number: 30

| | | | | |
|---|---|---|---|---|
| **SG16** | - C | 9999 | - | CPS-SG17-SG22 |
| **SG22** | - C | 9999 | - | LIN-PIA-IMD-QTY-QVR-DTM-FTX-SG28-SG29 |
| **SG28** | - C | 10 | - | RFF-DTM |
| **RFF** | - M | 1 | - | Reference |

Function:

To specify a reference.

| | | EDIFACT | GS1 | * | Description |
|---|---|---|---|---|---|
| C506 | REFERENCE | M | **M** | | |
| 1153 | Reference code qualifier | M an..3 | **M** | | AAK = Despatch advice number<br>AAU = Despatch note number<br>ALO = Receiving advice number<br>CR = Customer reference number<br>ON = Order number (buyer)<br>POR = Purchase order response number<br>PP = Purchase order change number<br>VN = Order number (supplier) |
| 1154 | Reference identifier | C an..70 | **R** | | |
| 1156 | Document line identifier | C an..6 | **O** | | |
| 4000 | Reference version identifier | C an..35 | **N** | | |
| 1060 | Revision identifier | C an..6 | **N** | | |

Segment Notes:

This segment is used to specify any references associated with the current line item.

Example:
RFF+AAK:63321'

## 5. Segments Layout

Segment number: 31

| | | | | |
|---|---|---|---|---|
| **SG16** | - C | 9999 | - | CPS-SG17-SG22 |
| **SG22** | - C | 9999 | - | LIN-PIA-IMD-QTY-QVR-DTM-FTX-SG28-SG29 |
| **SG28** | - C | 10 | - | RFF-DTM |
| **DTM** | - C | 1 | - | Date/time/period |

Function:

To specify date, and/or time, or period.

| | | EDIFACT | GS1 | * | Description |
|---|---|---|---|---|---|
| C507 | DATE/TIME/PERIOD | M | **M** | | |
| 2005 | Date or time or period function code qualifier | M an..3 | **M** | * | 171 = Reference date/time |
| 2380 | Date or time or period value | C an..35 | **R** | | |
| 2379 | Date or time or period format code | C an..3 | **R** | | 102 = CCYYMMDD |

Segment Notes:

This segment is used to specify dates related to the references given in the previous RFF segment.

Example:
DTM+171:20021115:102'

## 5. Segments Layout

Segment number: 32

| | | | | |
|---|---|---|---|---|
| **SG16** | - C | 9999 | - | CPS-SG17-SG22 |
| **SG22** | - C | 9999 | - | LIN-PIA-IMD-QTY-QVR-DTM-FTX-SG28-SG29 |
| **SG29** | - C | 9999 | - | PCI-QTY-QVR-SG31 |
| **PCI** | - M | 1 | - | Package identification |

Function:

To specify markings and labels on individual packages or physical units.

| | | EDIFACT | GS1 | * | Description |
|---|---|---|---|---|---|
| 4233 | Marking instructions code | C an..3 | **O** | | 17 = Supplier's instructions<br>39 = Marked with Serial Shipping Container Code (SSCC) |
| C210 | MARKS & LABELS | C | **O** | | |
| 7102 | Shipping marks description | M an..35 | **M** | | |
| 7102 | Shipping marks description | C an..35 | **O** | | |
| 7102 | Shipping marks description | C an..35 | **O** | | |
| 7102 | Shipping marks description | C an..35 | **O** | | |
| 7102 | Shipping marks description | C an..35 | **O** | | |
| 7102 | Shipping marks description | C an..35 | **O** | | |
| 7102 | Shipping marks description | C an..35 | **O** | | |
| 7102 | Shipping marks description | C an..35 | **O** | | |
| 7102 | Shipping marks description | C an..35 | **O** | | |
| 7102 | Shipping marks description | C an..35 | **O** | | |
| 8275 | Container or package contents indicator code | C an..3 | **N** | | |
| C827 | TYPE OF MARKING | C | **N** | | |
| 7511 | Marking type code | M an..3 | | | |
| 1131 | Code list identification code | C an..17 | | | |
| 3055 | Code list responsible agency code | C an..3 | | | |

Segment Notes:

This segment is used to provide markings and labels information relevant to the product identified in the LIN segment.

Example:
PCI+17'

## 5. Segments Layout

Segment number: 33

| | | | | |
|---|---|---|---|---|
| **SG16** | - C | 9999 | - | CPS-SG17-SG22 |
| **SG22** | - C | 9999 | - | LIN-PIA-IMD-QTY-QVR-DTM-FTX-SG28-SG29 |
| **SG29** | - C | 9999 | - | PCI-QTY-QVR-SG31 |
| **QTY** | - C | 1 | - | Quantity |

Function:

To specify a pertinent quantity.

| | | EDIFACT | GS1 | * | Description |
|---|---|---|---|---|---|
| C186 | QUANTITY DETAILS | M | **M** | | |
| 6063 | Quantity type code qualifier | M an..3 | **M** | * | 194 = Received and accepted |
| 6060 | Quantity | M an..35 | **M** | | |
| 6411 | Measurement unit code | C an..3 | **D** | | This DE is only used if the current product is of variable quantity. |

Segment Notes:

This segment is used to indicate the quantity of the current line item received and accepted which is contained in the package marked with the Serial Shipping Container Code identified in the following GIN segment.

Example:
QTY+194:45'

## 5. Segments Layout

Segment number: 34

| | | | | |
|---|---|---|---|---|
| **SG16** | - C | 9999 | - | CPS-SG17-SG22 |
| **SG22** | - C | 9999 | - | LIN-PIA-IMD-QTY-QVR-DTM-FTX-SG28-SG29 |
| **SG29** | - C | 9999 | - | PCI-QTY-QVR-SG31 |
| **QVR** | - C | 1 | - | Quantity variances |

Function:

To specify item details relating to quantity variances.

| | | EDIFACT | GS1 | * | Description |
|---|---|---|---|---|---|
| C279 | QUANTITY DIFFERENCE INFORMATION | C | **R** | | |
| 6064 | Quantity variance value | M n..15 | **M** | | Specify the actual variance amount here. |
| 6063 | Quantity type code qualifier | C an..3 | **R** | | 12 = Despatch quantity<br>21 = Ordered quantity<br>46 = Delivered quantity<br>195 = Received, not accepted, to be returned<br>196 = Received, not accepted, to be destroyed |
| 4221 | Discrepancy nature identification code | C an..3 | **O** | | AC = Over-shipped<br>AE = Delivered but not advised<br>AF = Goods delivered damaged<br>AG = Delivered too late<br>BP = Shipment partial - back order to follow<br>CP = Shipment partial - considered complete, no backorder |
| C960 | REASON FOR CHANGE | C | **O** | | |
| 4295 | Change reason description code | C an..3 | **R** | | AT = Item not ordered<br>BA = Damaged Goods<br>BN = Temperature outside agreed range<br>BJ = Item identification code unknown<br>BL = Item represents substitution from original order<br>BM = Minimum/maximum product durability date unacceptable<br>PC = Pack difference |
| 1131 | Code list identification code | C an..17 | **O** | | |
| 3055 | Code list responsible agency code | C an..3 | **D** | | |
| 4294 | Change reason description | C an..35 | **O** | | |

Segment Notes:

This segment is used to specify quantity variances for the current line item which is contained in the package marked with the Serial Shipping Container Code identified in the following GIN segment.
For negative values (e.g. damaged goods not accepted) the variance must be expressed as negative.
DE 6064 and 6063: These DE's must be used to indicate the quantity not being accepted which is the difference between the despatched (delivered) quantity and the received and accepted quantity.

Example:
QVR+40:195+AC'

## 5. Segments Layout

Segment number: 35

| | | | | |
|---|---|---|---|---|
| **SG16** | - C | 9999 | - | CPS-SG17-SG22 |
| **SG22** | - C | 9999 | - | LIN-PIA-IMD-QTY-QVR-DTM-FTX-SG28-SG29 |
| **SG29** | - C | 9999 | - | PCI-QTY-QVR-SG31 |
| **SG31** | - C | 10 | - | GIN |
| **GIN** | - M | 1 | - | Goods identity number |

Function:

To give specific identification numbers, either as single numbers or ranges.

| | | EDIFACT | GS1 | * | Description |
|---|---|---|---|---|---|
| 7405 | Object identification code qualifier | M an..3 | **M** | | AW = Serial shipping container code<br>BJ = Serial shipping container code |
| C208 | IDENTITY NUMBER RANGE | M | **M** | | |
| 7402 | Object identifier | M an..35 | **M** | | |
| 7402 | Object identifier | C an..35 | **O** | | |
| C208 | IDENTITY NUMBER RANGE | C | **O** | | |
| 7402 | Object identifier | M an..35 | **M** | | |
| 7402 | Object identifier | C an..35 | **O** | | |
| C208 | IDENTITY NUMBER RANGE | C | **O** | | |
| 7402 | Object identifier | M an..35 | **M** | | |
| 7402 | Object identifier | C an..35 | **O** | | |
| C208 | IDENTITY NUMBER RANGE | C | **O** | | |
| 7402 | Object identifier | M an..35 | **M** | | |
| 7402 | Object identifier | C an..35 | **O** | | |
| C208 | IDENTITY NUMBER RANGE | C | **O** | | |
| 7402 | Object identifier | M an..35 | **M** | | |
| 7402 | Object identifier | C an..35 | **O** | | |

Segment Notes:

This segment is used to provide the Serial Shipping Container Code marked on the packaging of the current line item.
DE C208: If a sequential series of identity numbers is provided (e.g., 1 up to and including 10) only one repetition of the C208 composite is needed with the first repetition of 7402 specifying the numerically smaller identity number (e.g., 1) and the second repetition the larger identity number (e.g., 10). If identity numbers are not sequential and part of a series (e.g., 1, 3, and 10) then a separate C208 and DE 7402 must be used for each identity number.
Within internal applications, users may provide a range of Serial Shipping Container Codes using one repetition of C208 (as described above) by transmitting a 17 digit SSCC and calculating the check digit within the application.
In EANCOM it is recommended to use the Serial Shipping Container Code (SSCC) for unique identification of individual transport packages.

Example:
GIN+AW+354123450000000014'

## 5. Segments Layout

Segment number: 36

| **CNT** | - C | 1 - Control total | | | |
|---|---|---|---|---|---|
| Function:<br>To provide control total. | | | | | |
| | | EDIFACT | GS1 | * | Description |
| C270 | CONTROL | M | **M** | | |
| 6069 | Control total type code qualifier | M an..3 | **M** | * | 2 = Number of line items in message |
| 6066 | Control total value | M n..18 | **M** | | |
| 6411 | Measurement unit code | C an..3 | **O** | | |

Segment Notes:

This segment is used to provide message control information for checking on the message receivers in-house system.

Example:
CNT+2:120'

## 5. Segments Layout

Segment number: 37

| **UNT** - M 1 - Message trailer | | | | | |
|---|---|---|---|---|---|
| Function:<br>To end and check the completeness of a message. | | | | | |
| | | EDIFACT | GS1 | * | Description |
| 0074 | Number of segments in the message | M n..6 | **M** | | The total number of segments in the message is detailed here. |
| 0062 | Message reference number | M an..14 | **M** | | The message reference numbered detailed here should equal the one specified in the UNH segment. |
| Segment Notes:<br>This segment is a mandatory UN/EDIFACT segment. It must always be the last segment in the message.<br><br>Example:<br>UNT+34+ME000001' | | | | | |

## 5. Segments Layout

Segment number: 38

| **UNZ** - M 1 - Interchange trailer | | | | | |
|---|---|---|---|---|---|
| Function:<br>To end and check the completeness of an interchange. | | | | | |
| | | EDIFACT | GS1 | * | Description |
| 0036 | Interchange control count | M n..6 | **M** | | Number of messages or functional groups within an interchange. |
| 0020 | Interchange control reference | M an..14 | **M** | | Identical to DE 0020 in UNB segment. |
| Segment Notes:<br>This segment is used to provide the trailer of an interchange.<br>UNZ+5+12345555'<br>DE 0036: If functional groups are used, this is the number of functional groups within the interchange. If functional groups are not used, this is the number of messages within the interchange. | | | | | |

**Example 1 - Receiving Advice Confirming Reception and Acceptance of Complete Shipment**

| EXAMPLE | ORDERED/ CONFIRMED ORDERS/ORDRSP - LIN | DESPATCHED DESADV - LIN Despatch note | RECEIVED AND ACCEPTED RECADV - LIN | VARIANCES/REASONS/ ACTIONS RECADV - QVR |
|---|---|---|---|---|
| 1 | 100 | 100 | 100 | - |

The following is an example of a Receiving Advice message providing a confirmation of the reception of a shipment. The Receiving Advice is sent by the buyer of goods identified by GLN 5412345000013 to the supplier identified by GLN 5410738100005.

The Receiving Advice with reference REC5488 is sent the 11 March 2002. The goods were received 25 February 2002 in reference to the buyer's Purchase Order number PO12345 dated 20 February 2002 and the supplier's Despatch Advice number DA45601 dated 25 February 2002.

The Receiving Advice confirms the reception and acceptance of the whole shipment. No detailed information on the shipment contents is provided.

| | |
|---|---|
| UNH+ME000001+RECADV:D:01B:UN:EAN008' | Message header |
| BGM+632+REC5488+29' | Receiving advice number REC5488 |
| DTM+137:20020311:102' | Message date 11th of March 2002 |
| DTM+50:20020225:102' | Goods receipt date 25th of February 2002 |
| RFF+AAK:DA45601' | Receipt relates to despatch advice number DA45601 |
| DTM+171:20020225:102' | Despatch advice date 25th of February 2002 |
| RFF+ON:PO12345' | Receipt relates to buyer’s order number PO12345 |
| DTM+171:20020220:102' | Order date 20th of February 2002 |
| NAD+BY+5412345000013::9' | Buyer identified by GLN 5412345000013 |
| RFF+VA:1452216' | Buyer’s VAT number 1452216 |
| NAD+SU+5410738100005::9' | Supplier identified by GLN 5410738100005 |
| RFF+VA:5448776' | Supplier’s VAT number 5448776 |
| UNT+13+ME000001' | Total number of segments in the message equals 13 |

**6. Examples**

**Example 2 - Receiving Advice Message Informing of Damaged Goods**

| EXAMPLE | ORDERED/ CONFIRMED ORDERS/ORDRSP – LIN | DESPATCHED DESADV - LIN Despatch note | RECEIVED AND ACCEPTED RECADV - LIN | VARIANCES/REASONS/ACTIONS RECADV - QVR |
|---|---|---|---|---|
| 2 | 100 | 100 | 95 | - 100 delivered, shipment damaged, quantity difference 5 |

The following is an example of a Receiving Advice message providing the receiving details for a shipment. The Receiving Advice is sent by the buyer of goods identified by GLN 5412345000013 to the supplier identified by GLN 5410738100005. The Receiving Advice with reference REC5490 is sent the 11 March 2002. The goods were received 10 March 2002 in reference to the buyer's Purchase Order number PO12345 dated 1 March 2002 and the supplier's Despatch Advice number DA45601 dated 10 March 2002.

The trading partners have specified beforehand within the Interchange Agreement what actions will be taken with respect to common occurring discrepancies between received and accepted quantities and quantities ordered/despatched. Both trading partners have agreed and know what actions should be taken in such circumstances. In this scenario, the Receiving Advice message is used as a status report, with the required actions being agreed outside the EDI environment.

The Receiving Advice confirms the receipt and acceptance of 95 units of product 5410738000169 and informs that 100 units were delivered and that 5 units were delivered damaged (The trading partners have agreed that in such a case, the units will be destroyed. This action is agreed beforehand and is not indicated within the Receiving Advice.)

| | |
|---|---|
| UNH+ME000001+RECADV:D:01B:UN:EAN008' | Message header |
| BGM+632+REC5490+9' | Receiving advice number REC5490 |
| DTM+137:20020311:102' | Message date 11th of March 2002 |
| DTM+50:20020310:102' | Goods receipt date 10th of March 2002 |
| RFF+AAK:DA45601' | Receipt relates to despatch advice number DA45601 |
| DTM+171:20020310:102' | Despatch advice date 10th of March 2002 |
| RFF+ON:PO12345' | Receipt relates to buyer’s order number PO12345 |
| DTM+171:20020301:102' | Date of order 1st of March 2002 |
| NAD+BY+5412345000013::9' | Buyer identified by GLN 5412345000013 |
| RFF+VA:1452216' | Buyer’s VAT number is 1452216 |
| NAD+SU+5410738100005::9' | Supplier identified by GLN 5410738100005 |
| RFF+VA:5448776' | Supplier’s VAT number 5448776 |
| CPS+1' | Consignment packing sequence 1 |
| LIN+1++5410738000169:SRV' | Received product identified by GTIN 5410738000169 |
| QTY+194:95' | Received and accepted quantity 95 |
| QTY+12:100' | Despatched quantity 100 |
| QVR+-5:196+AF' | Quantity variance of minus 5 (difference between |

| | |
|---|---|
| | received/accepted and despatched quantities) because goods delivered damaged which will be destroyed |
| UNT+18+ME000001' | Total number of segments in the message equals 18 |

**Example 3 - Receiving Advice Message Informing of Damaged Goods to Be Destroyed**

| EXAMPLE | ORDERED/ CONFIRMED ORDERS/ORDRSP - LIN | DESPATCHED DESADV - LIN Despatch note | RECEIVED AND ACCEPTED RECADV - LIN | VARIANCES/REASONS/ ACTIONS RECADV - QVR |
|---|---|---|---|---|
| 3 | 100 | 100 | 95 | -5 Damaged - destroy |

The following is an example of a Receiving Advice message providing the receiving details for a shipment. The Receiving Advice is sent by the buyer of goods identified by GLN 5412345000013 to the supplier identified by GLN 5410738100005.

The Receiving Advice with reference RA000001 is sent the 11 March 2002. The goods were received 10 March 2002 in reference to the buyer's Purchase Order number PO12345 dated 1 March 2002 and the supplier's Despatch Advice number DA45601 dated 10 March 2002.

The Receiving Advice confirms the receipt and acceptance of 95 units of product 5410738000169 and rejects 5 units delivered damaged and which will be destroyed.

| | |
|---|---|
| UNH+ME000001+RECADV:D:01B:UN:EAN008' | Message header |
| BGM+632+RA000001+9' | Receiving advice number RA000001 |
| DTM+137:20020311:102' | Message date 11th of March 2002 |
| DTM+50:20020310:102' | Goods received date 10th of March 2002 |
| RFF+AAK:DA45601' | Receipt relates to despatch advice number DA45601 |
| DTM+171:20020310:102' | Despatch advice date 10th of March 2002 |
| RFF+ON:PO12345' | Receipt relates to buyer’s order number PO12345 |
| DTM+171:20020301:102' | Date of order 1st of March 2002 |
| NAD+BY+5412345000013::9' | Buyer identified by GLN 5412345000013 |
| RFF+VA:1452216' | Buyer’s VAT number is 1452216 |
| NAD+SU+5410738100005::9' | Supplier identified by GLN 5410738100005 |
| RFF+VA:5448776' | Supplier’s VAT number 5448776 |
| CPS+1' | Consignment packing sequence 1 |
| LIN+1++5410738000169:SRV' | Received product identified by GTIN 5410738000169 |

| | |
|---|---|
| QTY+194:95' | Received and accepted quantity 95 |
| QTY+21:100' | Ordered quantity 100 |
| QVR+-5:196+AF' | Quantity variance of minus 5 (difference between received/accepted and despatched quantities) because goods delivered damaged which will be destroyed |
| UNT+18+ME000001’ | Total number of segments in the message equals 18 |

**Example 4 - Receiving Advice Informing of Damaged Goods to be Destroyed, Back Order Confirmed**

| EXAMPLE | ORDERED/ CONFIRMED ORDERS/ORDRSP - LIN | DESPATCHED DESADV - LIN Despatch note | RECEIVED AND ACCEPTED RECADV - LIN | VARIANCES/REASONS/ ACTIONS RECADV - QVR |
|---|---|---|---|---|
| 4 | 100 | 85 | 83 | -2 Damaged - destroy |

The following is an example of a Receiving Advice message providing the receiving details for a shipment. The Receiving Advice is sent by the buyer of goods identified by GLN 5412345000013 to the supplier identified by GLN 5410738100005.

The Receiving Advice with reference RA000001 is sent the 11 March 2002. The goods were received 10 March 2002 in reference to the buyer's Purchase Order number PO12345 dated 1 March 2002 and the supplier's Despatch Advice number DA45601 dated 10 March 2002.

The Receiving Advice confirms the receipt and acceptance of 83 units of product 5410738000169 and rejects 2 units delivered damaged and which will be destroyed. A back order for 15 units was confirmed previous to the despatch of goods.

| | |
|---|---|
| UNH+ME000001+RECADV:D:01B:UN:EAN008' | Message header |
| BGM+632+RA000001+9' | Receiving advice number RA000001 |
| DTM+137:20020311:102' | Message date 11th of March 2002 |
| DTM+50:20020310:102' | Goods received date 10th of March 2002 |
| RFF+AAK:DA45601' | Receipt relates to despatch advice number DA45601 |
| DTM+171:20020310:102' | Despatch advice date 10th of March 2002 |
| RFF+ON:PO12345' | Receipt relates to buyer’s order number PO12345 |
| DTM+171:20020301:102' | Date of order 1st of March 2002 |
| NAD+BY+5412345000013::9' | Buyer identified by GLN 5412345000013 |
| RFF+VA:1452216' | Buyer’s VAT number is 1452216 |
| NAD+SU+5410738100005::9' | Supplier identified by GLN 5410738100005 |
| RFF+VA:5448776' | Supplier’s VAT number 5448776 |

| | |
|---|---|
| CPS+1' | Consignment packing sequence 1 |
| LIN+1++5410738000169:SRV' | Received product identified by GTIN 5410738000169 |
| QTY+194:83' | Received and accepted quantity 83 |
| QTY+46:85’ | Delivered quantity 85 |
| QTY+21:100' | Ordered quantity 100 |
| QVR+-2:196+AF' | First quantity variance of minus 2 (difference between received/accepted and delivered quantities) is because goods delivered damaged which will be destroyed |
| QVR+-15:83+BP' | Second quantity variance of minus 15 (difference between delivered and ordered quantities) is because of a short delivery for which a back order will follow |
| UNT+20+ME000001’ | Total number of segments in the message equals 20 |

**Example 5 - Receiving Advice Changing Back Order Status**

| EXAMPLE | ORDERED/ CONFIRMED ORDERS/ORDRSP - LIN | DESPATCHED DESADV - LIN Despatch note | RECEIVED AND ACCEPTED RECADV - LIN | VARIANCES/REASONS/ ACTIONS RECADV - QVR |
|---|---|---|---|---|
| 5 | 100 | 85 | 85 | -15 Back ordered |

The following is an example of a Receiving Advice message providing the receiving details for a shipment. The Receiving Advice is sent by the buyer of goods identified by GLN 5412345000013 to the supplier identified by GLN 5410738100005.

The Receiving Advice with reference RA000001 is sent the 11 March 2002. The goods were received 10 March 2002 in reference to the buyer's Purchase Order number PO12345 dated 1 March 2002 and the supplier's Despatch Advice number DA45601 dated 10 March 2002.

The Receiving Advice confirms the receipt and acceptance of 85 units of product 5410738000169 and informs that the other 15 units on back order should be cancelled if not delivered by 28 March 2002. The Receiving Advice affects the status of an outstanding order line.

| | |
|---|---|
| UNH+ME000001+RECADV:D:01B:UN:EAN008' | Message header |
| BGM+632+RA000001+9' | Receiving advice number RA000001 |
| DTM+137:20020311:102' | Message date 11th of March 2002 |
| DTM+50:20020310:102' | Goods received date 10th of March 2002 |
| RFF+AAK:DA45601' | Receipt relates to despatch advice number DA45601 |

**6. Examples**

| | |
|---|---|
| DTM+171:20020310:102' | Despatch advice date 10th of March 2002 |
| RFF+ON:PO12345' | Receipt relates to buyer's order number PO12345 |
| DTM+171:20020301:102' | Date of order 1st of March 2002 |
| NAD+BY+5412345000013::9' | Buyer identified by GLN 5412345000013 |
| RFF+VA:1452216' | Buyer's VAT number is 1452216 |
| NAD+SU+5410738100005::9' | Supplier identified by GLN 5410738100005 |
| RFF+VA:5448776' | Supplier's VAT number 5448776 |
| CPS+1' | Consignment packing sequence 1 |
| LIN+1++5410738000169:SRV' | Received product identified by GTIN 5410738000169 |
| QTY+194:85' | Received and accepted quantity 85 |
| QTY+21:100' | Ordered quantity 100 |
| QVR+-15:83+BP' | Quantity variance of minus 15 (difference between received/accepted and ordered quantities) for which a back order will follow |
| DTM+61:20020328:102' | Back order is to be cancelled if not delivered by the 28th of March 2002 |
| UNT+19+ME000001 | Total number of segments in the message equals 19 |

**Example 6 - Receiving Advice Rejecting Excess Shipment (Goods Returned)**

| EXAMPLE | ORDERED/ CONFIRMED ORDERS/ORDRSP - LIN | DESPATCHED DESADV - LIN Despatch note | RECEIVED AND ACCEPTED RECADV - LIN | VARIANCES/REASONS/ ACTIONS RECADV - QVR |
|---|---|---|---|---|
| 6 | 100 | 120 | 100 | 20 Excess delivery, return |

The following is an example of a Receiving Advice message providing the receiving details for a shipment. The Receiving Advice is sent by the buyer of goods identified by GLN 5412345000013 to the supplier identified by GLN 5410738100005.

The Receiving Advice with reference RA000001 is sent the 11 March 2002. The goods were received 10 March 2002 in reference to the buyer's Purchase Order number PO12345 dated 1 March 2002 and the supplier's Despatch Advice number DA45601 dated 10 March 2002.

The Receiving Advice confirms the receipt and acceptance of 100 units of product 5410738000169 and rejects the reception of 20 additional units which were delivered in excess. The excess delivery will be returned to the supplier who will have to collect the goods on 28 March 2002.

| | |
|---|---|
| UNH+ME000001+RECADV:D:01B:UN:EAN008' | Message header |

## 6. Examples

| | |
|---|---|
| BGM+632+RA000001+9' | Receiving advice number RA000001 |
| DTM+137:20020311:102' | Message date 11th of March 2002 |
| DTM+50:20020310:102' | Goods received date 10th of March 2002 |
| RFF+AAK:DA45601' | Receipt relates to despatch advice number DA45601 |
| DTM+171:20020310:102' | Despatch advice date 10th of March 2002 |
| RFF+ON:PO12345' | Receipt relates to buyer's order number PO12345 |
| DTM+171:20020301:102' | Date of order 1st of March 2002 |
| NAD+BY+5412345000013::9' | Buyer identified by GLN 5412345000013 |
| RFF+VA:1452216' | Buyer's VAT number is 1452216 |
| NAD+SU+5410738100005::9' | Supplier identified by GLN 5410738100005 |
| RFF+VA:5448776' | Supplier's VAT number 5448776 |
| CPS+1' | Consignment packing sequence 1 |
| LIN+1++5410738000169:SRV' | Received product identified by GTIN 5410738000169 |
| QTY+194:100' | Received and accepted quantity 100 |
| QTY+46:120' | Delivered quantity 120 |
| QTY+21:100' | Ordered quantity 100 |
| QVR+20:195+AC' | Quantity variance of plus 20 are to be returned due to over delivery |
| DTM+200:20020328:102' | Excess goods should be collected by the 28th of March 2002 |
| UNT+19+ME000001 | Total number of segments in the message equals 19 |

**Example 7 - Receiving Advice Informing of Unknown Shipped Goods**

| EXAMPLE | ORDERED/ CONFIRMED ORDERS/ORDRSP - LIN | DESPATCHED DESADV - LIN Despatch note | RECEIVED AND NOT ACCEPTED RECADV - LIN | VARIANCES/REASONS/ ACTIONS RECADV - QVR |
|---|---|---|---|---|
| 7 | 100 | 100 | 100 | Excess delivery, unknown pallet received - return |

The following is an example of a Receiving Advice message providing the receiving details for a shipment. The Receiving Advice is sent by the buyer of goods identified by GLN 5412345000013 to the supplier identified by GLN 5410738100005.

The Receiving Advice with reference RA000001 is sent the 11 March 2002. The goods were received 10 March 2002 in reference to the buyer's Purchase Order number PO12345 dated 1 March 2002 and the supplier's Despatch Advice number DA45601 dated 10 March 2002.

The Receiving Advice notifies the supplier of the receipt of 100 units of product 5410738000169 which are unknown (not ordered). These products were delivered on the pallet with the Serial Shipping Container Code 354107380000000019.

| | |
|---|---|
| UNH+ME000001+RECADV:D:01B:UN:EAN008' | Message header |
| BGM+352::9+RA000001+9' | Receiving advice number RA000001 |
| DTM+137:20020311:102' | Message date 11th of March 2002 |
| DTM+50:20020310:102' | Goods receipt date 10th of March 2002 |
| RFF+AAK:DA45601' | Receipt relates to despatch advice number DA45601 |
| DTM+171:20020310:102' | Despatch advice date 10th of March 2002 |
| RFF+ON:PO12345' | Receipt relates to buyer’s order number PO12345 |
| DTM+171:20020301:102' | Date of order 1st of March 2002 |
| NAD+BY+5412345000013::9' | Buyer identified by GLN 5412345000013 |
| RFF+VA:1452216' | Buyer’s VAT number is 1452216 |
| NAD+SU+5410738100005::9' | Supplier identified by GLN 5410738100005 |
| RFF+VA:5448776' | Supplier’s VAT number 5448776 delivery |
| CPS+1' | Consignment packing sequence 1 |
| PAC+1++201::9' | One ISO 1 pallet |
| PCI+33E' | Pallet marked with Serial Shipping Container Code |
| GIN+BJ+354107380000000019' | Serial Shipping Container Code 354107380000000019 |
| LIN+1++5410738000169:SRV' | Received product identified by GTIN 5410738000169 |

**6. Examples**

| | |
|---|---|
| QTY+194:0' | Received and accepted quantity 0 |
| QTY+46:100' | Delivered quantity 100 |
| QVR+100:195++AT' | Quantity variance of plus 100 are to be returned due to being never ordered |
| UNT+21+ME000001 | Total number of segments in the message equals 21 |

Note:
The EDI interchange will include the UNB..UNZ segments and, if applicable, the UNG..UNE segments (see part I, section 5.7).